CHAPTER 3
RESEARCH METHODOLOGY

The research steps in this project, is:

1. Test blink program and upload code to arduino uno and ardunio lilypad
2. Test sensor gyroscope and ESP8266 in Lilypad Arduino
3. Test sensor ultrasonic, proximity, and ESP in ardunio Uno
4. Set up the lilypad arduino and attach it to the dog strap
5. Set up the arduino uno and attach it to the dog cage
6. Set up a server for sending data
7. Attach the dog strap that has the lilypad attached to the dog's body
8. Test all installed sensors and the process of sending data
9. Record database
10. Analysis of dog activities
11. Report

CHAPTER 4
ANALYSIS AND DESIGN

4.1 Analysis

This project records dog activities in a day. Dog activities such as sitting and standing, inside the cage, eating or drinking which will be recorded later. By using gyroscope sensor to detect dogs is standing or sitting. Ultrasonic sensors is to find out the dog inside the cage and drinking. The proximity sensor is to find out if the dog is eating.

This research project, it takes several steps to get data, one of them is using Arduino Lilypad to be installed on the dog's body. Arduino lilypad is used as a microcontroller consisting of sensor gyroscope and ESP8266. Both are connected to a lilypad with 3volt power. The results of the gyroscope sensor will be sent to the mysql server via ESP8266.

Arduino microcontroller to find out whether the dog is in the cage, this project uses an ultrasonic sensor as distance sensor. This also uses a proximity sensor to know is the dog eating. Then all the data obtained from these sensors will be sent to the MySQL server using the ESP8266 wifi module.

In order to determine that the dog activity, this research needs an experiment for one hour to get the data that will be analyzed later. Analysis uses a statistical formula by calculating the average and standard deviation of each x, y, z axis to determine the range of each axis. In determining the range, the average must be bigger than the standard deviation.

Table 4.1: First Calculation Table

Position	Axis	Average	St. Dev
Sleeping	X	(-1523)	170
	Y	395	152
	Z	423	125
Walking	X	(-1508)	129
	Y	(-418)	4731
	Z	394	2041
Sitting	X	1486	55
	Y	(-85)	2994
	Z	(-8)	1734

Table 4.1 above is the initial data after calculating the averages and standard deviations. When the dog sleeps with x, y and z, the average of each position is bigger than the standard deviation so no calculation is needed. When the dog walks and sits the x axis has fulfilled an average bigger than the standard deviation, but y and z axis, on average smaller than the standard deviation, then calculates again by adding the expected number (+) by y <0 and z <0.

Table 4.2: Calculation Table Where y and z < 0

Position	Axis	Average	St. Dev
Sleeping	X	(-1523)	170
	Y	395	152
	Z	423	125
Walking	X<0	(-1508)	129
	Y<0	(-3461)	4827
	Z<0	(-1613)	1704

Sitting	X<0	(-1486)	55
	Y<0	(-2500)	2687
	Z<0	(-1652)	1608

Table 4.2 above is valuable data (+) omitted. When the dog walks and sits the y and z axis, the average is smaller than the standard deviation, then calculates again by adding the omission of the sum of the averages and the standard deviation of each axis by means of y <(the sum of the average and standard deviation) and z <(the sum of average and standard deviations).

Table 4.3: Calculation Table Where y and x < (The Sum Of The Average and St. Dev I)

Position	**Axis**	**Average**	**St. Dev**
Sleeping	X	(-1523)	170
	Y	395	152
	Z	423	125
Walking	X<0	(-1508)	129
	Y>-8000	(-2328)	1967
	Z>-3000	(-1024)	810
Sitting	X<0	(-1486)	55
	Y>-5000	(-1674)	1610
	Z>-3000	(-918)	873

Table 4.3 above is a calculation data by adding the omission of the sum of averages and the standard deviation of each axis by means of y and z <(the sum of the average and standard deviations). When the dog walks and sits the y and z axis, the average is smaller than the standard deviation, then calculates again by adding the omission of the sum of the averages and the standard deviation of each

axis by means of y <(the sum of the average and standard deviation) and z <(the sum of average and standard deviations).

Table 4.4: Calculation Table Where y and x < (The Sum Of The Average and St. Dev II)

Position	**Axis**	**Average**	**St. Dev**
Sleeping	X	(-1523)	170
	Y	395	152
	Z	423	125
Walking	X<0	-1508	129
	Y>-8000	-1300	1100
	Z>-3000	-684	546
Sitting	X<0	(-1486)	55
	Y>-3200	-920	769
	Z>-1700	-450	447

Table 4.4 above is a recalculation data to eliminate the standard deviation value to be smaller than the average by adding the omission of the sum of the averages and the standard deviation of each axis by means of y and z <(the sum of average and standard deviations). When the dog walks and sits the y and z axis, the average is smaller than the standard deviation, then calculates again by adding the omission of the sum of the averages and the standard deviation of each axis by y <(the sum of the average and standard deviation) and z <(the sum of average and standard deviations). The results of this calculation is, when the dog is sitting the values of the x, y and z axes are on average bigger than the standard deviation. But when the dog is walking a calculation is needed once again for the dog to walk.

Table 4.5: Calculation Table Dog's WalkingWhere y and x < (The Sum Of The Average and St. Dev)

Position	Axis	Average	St. Dev
Sleeping	X	(-1523)	170
	Y	395	152
	Z	423	125
Walking	X<0	-1508	129
	Y>-2400	-851	716
	Z>-1200	-461	337
Sitting	X<0	(-1486)	55
	Y>-3200	-920	769
	Z>-1700	-450	447

Table 4.5 above is a recalculation data when the dog is walking, after recalculation the average value is bigger than the standard deviation. The dog's activity while sleeping, sitting and standing has fulfilled the average value bigger than the standard deviation.

The result of the analysis obtained from the ultrasonic sensor and proximity sensor, which is installed in the dog cage, are as follows:

Table 4.6: Table In Dog Cage

No	Eating	Drinking	Cage
1	1	108	20
2	1	108	64
3	0	107	16
4	0	90	5
5	1	93	82
6	1	108	65

From table 4.6 above the proximity sensor used to find out dogs eat, ultrasonic sensors are used to find the dog, ineating or drinking. Ouput from proximity sensors in the form of numbers 1 and 0, when the value is 1 there is no object that decides the sensor, when the value is 0 then there is an object approaches the sensor. The output of the ultrasonic sensor when the object approaches the sensor will change the value to small and when the object away from the sensor the value will change much bigger value.

4.2 Desain

This research project requires the right placement of the sensors, so the installation becomes easier. In this sub chapter will explain using images about the design of sensors placement and flowchart data.

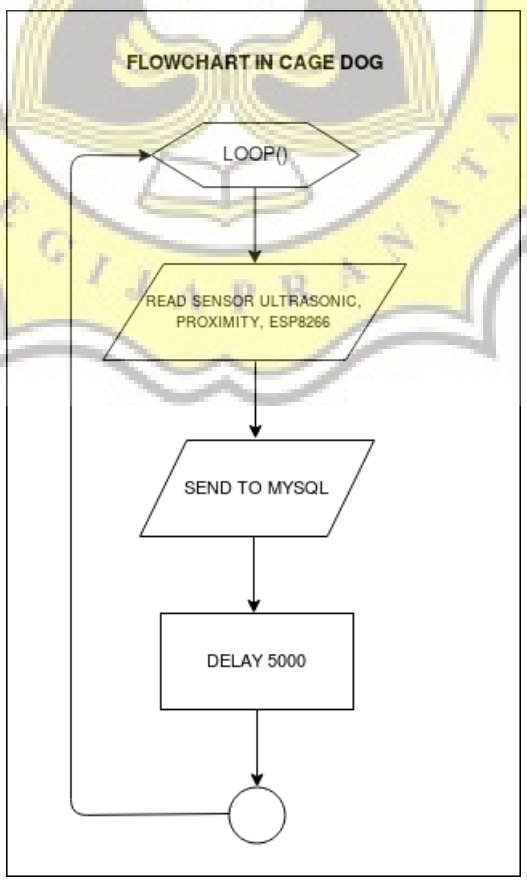

Illustration 4.1: Flowchart In Cage Dog

From the flowchart diagram above explains from each sensor is looping to get data. First is reading from each ultrasonic, proximity and ESP8266 sensors. Then after reading from each sensors, the data can be sent to MySQL. After the data has been sent, it will pause for 5 seconds. Then looping in retrieving data.

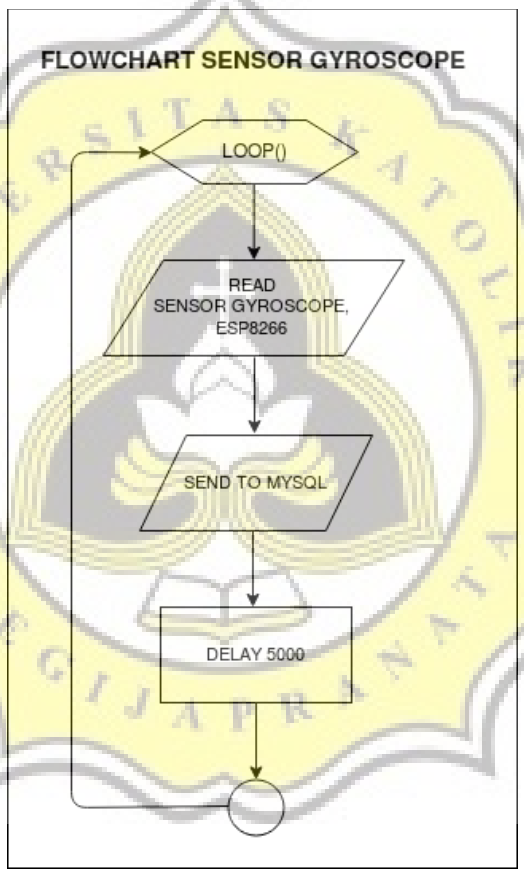

Illustration 4.2: Flowchart Sensor Gyroscope

From the flowchart diagram above explains the gyrosocpe sensor is looping to get data. First is reading from the gyroscope and ESP8266 sensors. After reading from the sensor data that can be sent to MySQL, after the data has been sent, it will pause for 5 seconds. Then looping in retrieving data.

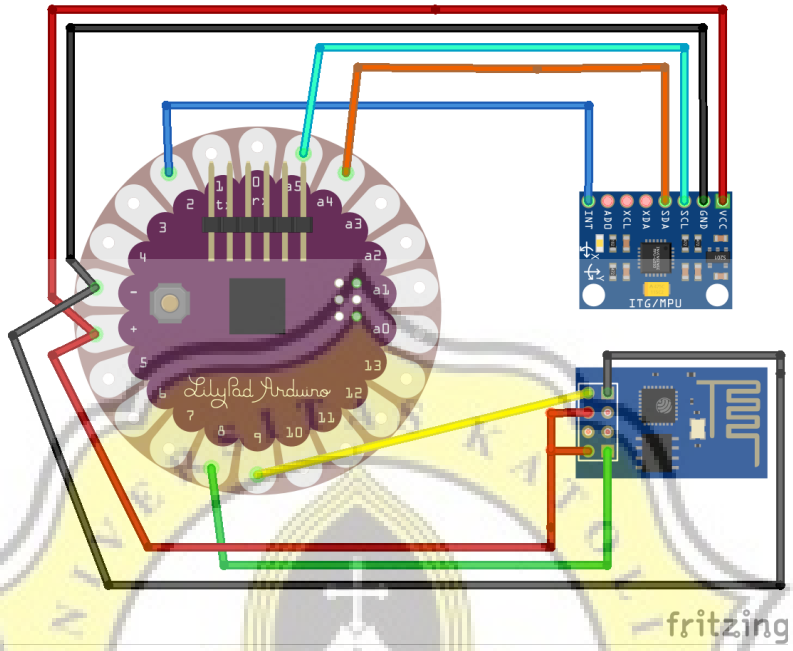

Illustration 4.3: Circuit In Dog Strap

Illustration 4.3 is a circuit design consisting of an Lilypad Arduino, gyroscope sensor and ESP8266 wifi module. This circuit will be attached to dog's body using dog's strap. Arduino lilypad uses a voltage of 3.3volt. So that all sensors can work with lithium polymer battery with a 3.7volt 720mAh voltage.

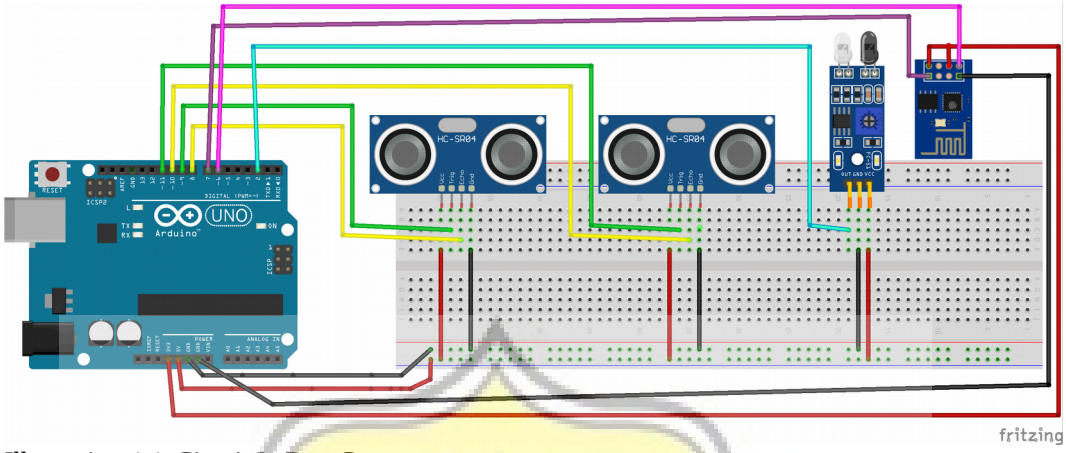

Illustration 4.4: Circuit In Dog Cage

From the illustration 4.4 is a circuit design that will be attached to dog cage using an arduino uno. Arduino Uno which consists of two ultasonic sensors, one proximity sensor and ESP8266 wifi module. The ultrasonic sensor and proximity are using 5 volt, while the ESP8266 wifi module is given 3.3volt. Power of All sensors are supplied by Powerbank which has a 5volt output.

CHAPTER 5

IMPLEMENTATION AND TESTING

5.1 Implementation

This program uses the Arduino 1.8.5 application to upload to Arduino Lilypad and Arduino Uno. On arduino lilypad installed gyroscope sensors and ESP8266 wifi module. Then in arduino Uno installed ultrasonic sensors, proximity sensors and ESP8266 wifi module.

```
Wire.beginTransmission(MPU);
  Wire.write(0x3B);
  Wire.endTransmission(false);
  Wire.requestFrom(MPU,12,true);
  AcX=Wire.read()<<8|Wire.read();
  AcY=Wire.read()<<8|Wire.read();
  AcZ=Wire.read()<<8|Wire.read();
  GyX=Wire.read()<<8|Wire.read();
  GyY=Wire.read()<<8|Wire.read();
  GyZ=Wire.read()<<8|Wire.read();
  delay(5000);
```

The function above is the code used on the gyroscope sensor taken from

https://create.arduino.cc/projecthub/Nicholas_N/how-to-use-the-accelerometer-gyroscope-gy-521-6dfc19

```
int kondisiSensor = digitalRead(pin_2);
if (kondisiSensor == LOW) {
    digitalWrite(led, HIGH);
} else digitalWrite(led, LOW);
delay (5000);
```

The code above is for proximity sensors. The output of the proximity sensor is when the object approaches the sensor, the value of 0 is indicated by the led light on. And if the object moves away from the sensor the value is 0 and the led light will turn off. The code for proximity sensor is taken from https://www.nyebarilmu.com.cara-mengakses-module-sensor-line-proximity-menggunakan-arduino/

```
digitalWrite(trig, LOW);
delayMicroseconds(500);
digitalWrite(trig, HIGH);
delayMicroseconds(500);
digitalWrite(trig, LOW);
delayMicroseconds(500);

durasi= pulseIn(echo, HIGH);
jarak= (durasi/2) / 29.1;
Serial.println(jarak);
```

The code above is the code for ultrasonic sensors. The output of the ultrasonic sensor is the distance in cm. The code for ultrasonic sensor is take from https://kelasrobot.com/cara-mudah-program-sensor-ultrasonic-dengan-arduino-tanpa-library/

5.2 Testing

After doing a few steps in the research above, the next step is to install sensors for the dog cage and on the dog's body to organize the data that will later be analyzed. The following is the design of mounting sensors in the dog cage and dog body:

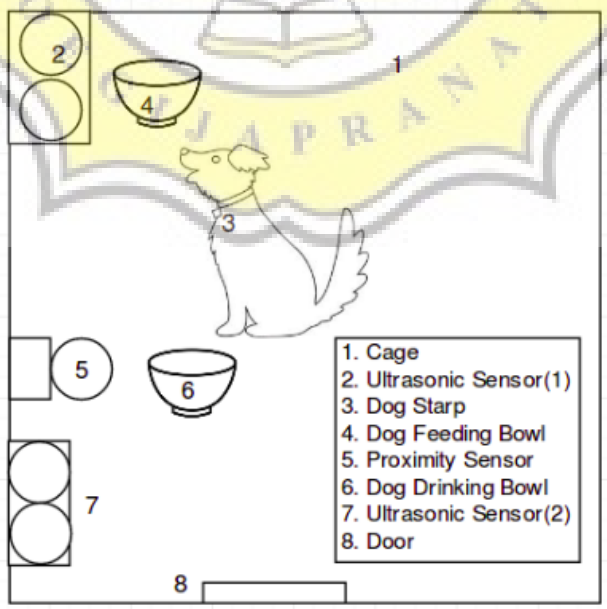

Illustration 5.1: Installation Plan

Below is a design for installing sensors to dog strap which will later be installed on the dog's body :

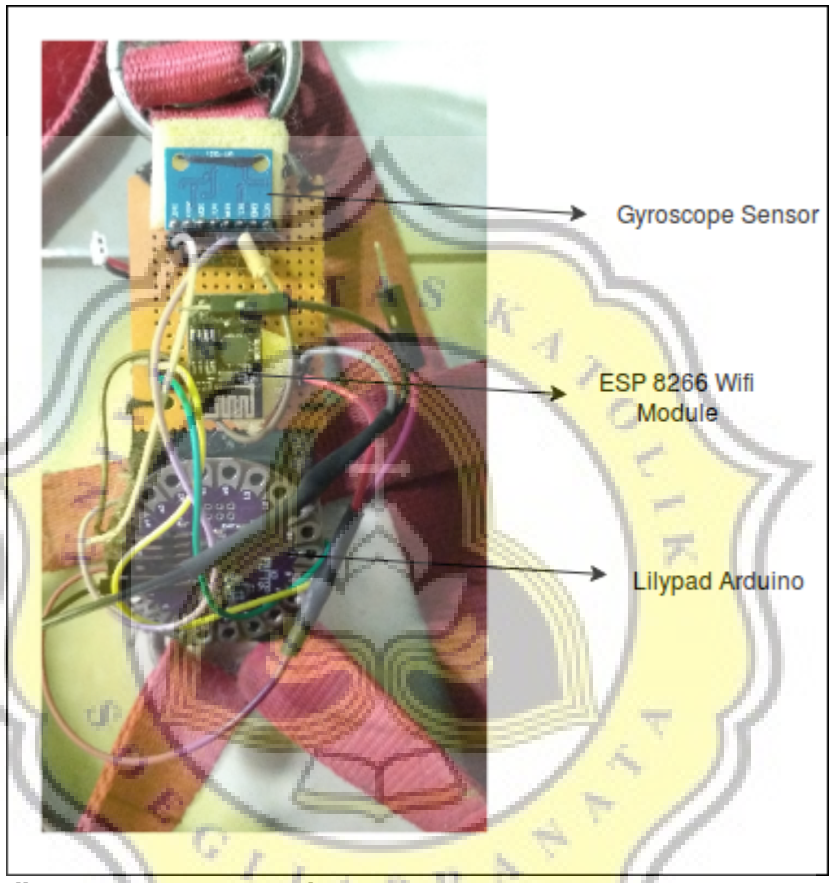

Illustration 5.2: Dog Strap Plan

Below is a design for installing sensors to dog cage which will later be installed on the dog's cage :

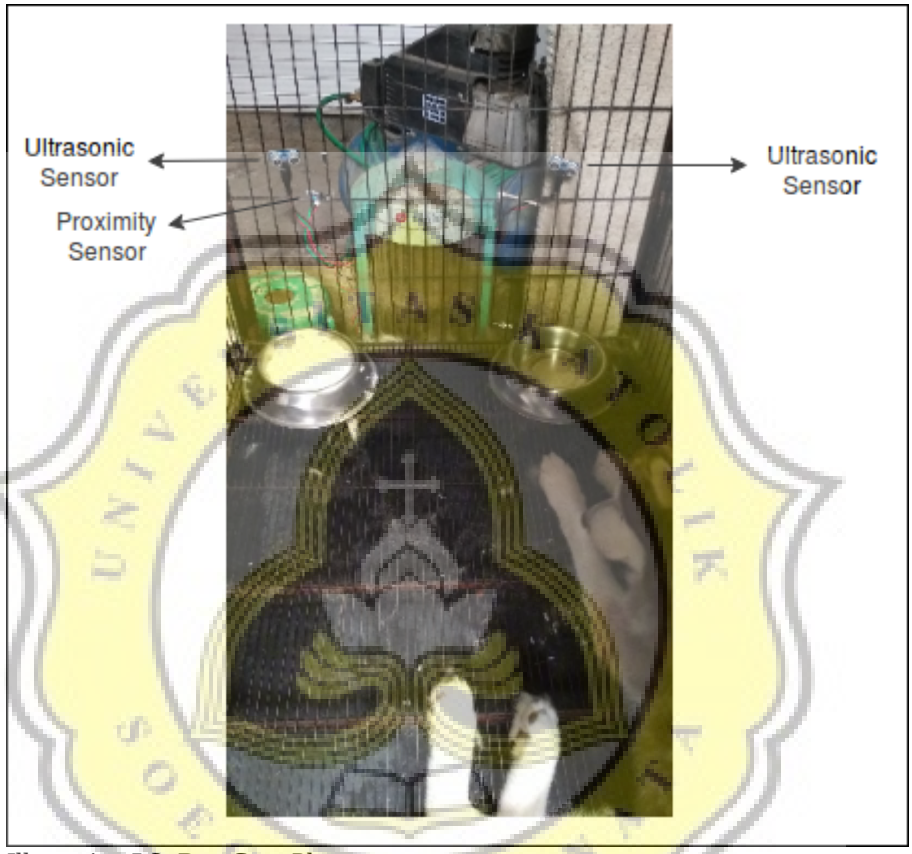

Illustration 5.3: Dog Cage Plan

To get data, it is necessary to record data on dog activities such as dogs sitting or standing, eating or drinking. When the dog is get outside from the cage and the dog start an activities, the data collection starts from 13:00 to 14:00 WIB. The following are the results of comparison of data after being analyzed by calculating averages and standard deviations:

Table 5.1: First Calculation Table

Position	Axis	First Data		Final Data	
		Average	St. Dev	Average	St. Dev
Sleeping	X	-1523	170	-1523	170
	Y	395	152	395	152
	Z	423	125	423	125
Walking	X	-1508	129	-1508	129
	Y	-418	4731	-851	716
	Z	394	2041	-461	337
Sitting	X	-1486	55	-1486	55
	Y	-85	2994	-920	769
	Z	-8	1734	-450	447

The following is data from the range of each x, y, and z axis:

Table 5.2: Range Of Activites Dog Table

Positon	Axis	Average	St. Dev	Range
Sleeping	X	-1523	170	(-1693) till (-1353)
	Y	395	152	547 till 243
	Z	423	125	548 till 298
Walking	X	-1508	129	(-1637) till (-1379)
	Y	-851	716	(-1567) till (-90)
	Z	-461	337	(-798) till (-124)
Sitting	X	-1486	55	(-1541) till (-1431)
	Y	-920	769	(-1689) till (-151)
	Z	-450	447	(-897) till (-3)

From the range data above can differentiate when the dog sleeps. And can also differentiate dogs sitting or standing by looking at a larger standard deviation before being processed using statistical calculations.

CHAPTER 6
CONCLUSION

The results of this project are:

1. Installing a system that is installed can run well and does not interfere with dog activities. The dogs continue to do activities as usual, such as walking, eating or drinking.

2. Data collection from all sensors can work well. The gyroscope data from the sensor installed on the dog's body is sent in full to mysql.Ultrasonic installed on the dog cage is sent in full on mysql.

3. From the sensors used to analyze each dog's activities when the dog is standing or sitting, eating or drinking, and inside the cage.

Suggestion

1. This research need to add a GPS NEO-M8 series sensor with high accuracy to find out where the dog is, not just in the cage.
2. In attaching the device to the dog's body, the strap is better placed on the part of the dog's body that does not move excessively while doing activities.

REFERENCES

Febriansyah, Aan & Eko Sulistyo & Ihda Aulia & Larasati. (2017). Rancang Bangun Kandang Pintar untuk Hewan Peliharaan (Kucing).

L. Koval*. J. Vaňuš**.P. Bilík*** (2016). Distance Measuring by Ultrasonic Sensor. IFAC-PapersOnLine 49-25 (2016) 153–158.

Melita, Rahmi Agus & Susetyo Bagas Bhaskoro & Ruminto Subekti. (2018). Pengendalian Kamera berdasarkan Deteksi Posisi Manusia Bergerak Jatuh berbasis Multi Sensor Accelerometer dan Gyroscope. http://dx.doi.org/10.26760/elkomika.v6i2.259

Mubarok, Asep & Wahyudi, S.T, M.T & Iwan Setiawan, S.T, M.T. (2017). Pendeteksi Rotasi Menggunakan Gyroscope Berbasis Mikrokontroler Atmega8535. Makalah Seminar Tugas Akhir.

Wiharto,Holy Lydia & Subekti Yuliananda. (2016). PENERAPAN SENSOR ULTRASONIK PADA SISTEM PENGISIAN ZAT CAIR DALAM TABUNG SILINDER BERBASIS MIKROKONTROLER ATmega 16. JHP17 Jurnal Hasil Penelitian LPPM Untag Surabaya September 2016, Vol. 01, No. 02, hal 159 – 168.

Yi-Jen, Mon. (2015). The Gyroscope Sensor Test by Using Arduino Platform.

APPENDIX

APPENDIX

FORMULIR SCAN ANTI PLAGIARISME 68 6

Nama : Yuce Herlina Ruci

Alamat email : 15K10033@student.unika.ac.id

Fak. / Prodi : Teknik Informatika NIM : 15.K1-0033

berupa(**TESIS, TUGAS AKHIR, PROPOSAL, SKRIPSI, SUMMARY, LAPORAN KERJA PRAKTEK**)

dengan judul : Analysis Of Daily Dog Activities Using Gyroscope Sensor

Semarang, 14-01-2019

Petugas, Yang Menyerahkan Dosen Pembimbing

Yuce Herlina Ruci

NB. Laporan hasil scan terlampir

*untuk Yang bersangkutan **

A