CHAPTER 4
ANALYSIS AND DESIGN

4.1 Analysis

This project made for analyzing the movement of cat inside the cage. The movement of cat can be record as sleep, sit and crawl position. The gyroscope at the vest can analyze body position as X, Y, Z axis.

This project can also find out the cat activities inside the cage. With installing sensors inside the cage, the sensor can detect what the cat is doing. There are three sensors in cage, two ultrasonic and one proximity.

The devices using arduino uno and arduino lilypad as mikrokontroller.. Arduino lilypad is light, so it installed on cat to operate gyroscope sensor put on cat vest. Ardunio Uno used for operates sensor inside the cage. This project used Arduino programming software.

Delivering data from sensor to server using esp8266 wifi module. Data from cat vest is stored to the database and then analyzed based on the x, y and z axis. Data from cat cages is stored to the database and then analyzed based on cat movement.

The process of analyzing the movement of the cat using statistical formula, averages and standard deviations. To analyze the movement of cat, cat use a vest for one hour.

Table 4.1: Data Gyroscope Sensor

Crawl	**X Axis**	**Y Axis**	**Z Axis**
St. Dev	82	2253	1403
Average	-1106	-1234	-129
Sit	**X Axis**	**Y Axis**	**Z Axis**
St. Dev	298	2213	2982
Average	-1568	-279	-362

Sleep	**X Axis**	**Y Axis**	**Z Axis**
St. Dev	306	200	103
Average	-1455	-470	-315

The results of the standard deviation and the average data taken for 1 hour using the vest. Table 4.1 show the position of cat crawl, sit and sleep which produces a high standard deviation and average. When the cat is crawling, some Y and Z axis value has bigger value so the standart deviation and the average have bigger value. When the cat is sitting the standart deviation and average value have big value because the Y and Z axis have big value. When the cat is sleeping Y and Z axis have value that almost same, when the cat crawling and sitting have Y and Z axis with positive and negative value, however Y and Z axis have more negative value. The next process is using limiting less than zero only get the negative value (axis < 0).

Table 4.2: Process Of Limiting Axis Gyroscope Sensor

Crawl	**X Axis < 0**	**Y Axis < 0**	**Z Axis < 0**
St. Dev	82	1956	683
Average	-1106	-1625	-653
Sit	**X Axis < 0**	**Y Axis < 0**	**Z Axis < 0**
St. Dev	298	1442	2261
Average	-1568	-1379	-1195
Sleep	**X Axis < 0**	**Y Axis < 0**	**Z Axis < 0**
St. Dev	306	200	103
Average	-1455	-470	-315

The process of removing data positive (axis <0) get result in table 4.2 The standard deviation is still of high value so the process is repeated again by giving a range of each position of the X, Y and Z axis. The next process decide the range by removing large values on each axis.

Table 4.3: Process Removing Large Value Gyroscope Sensor

Crawl	**X Axis > -1200**	**Y Axis >-4000**	**Z Axis > -1000**
St. Dev	82	823	203
Average	-1106	-1119	-378
Sit	**X Axis > -2000**	**Y Axis >-2500**	**Z Axis > -1000**
St. Dev	298	588	221
Average	-1568	-858	-348
Sleep	**X Axis > -1400**	**Y Axis >-900**	**Z Axis > -400**
St. Dev	306	200	103
Average	-1455	-470	-315

Table 4.3 produces a standard deviation that is of good value, because the standard deviation value is small. Data that has been processed twice can determine the range of the cat position.

4.2 Desain

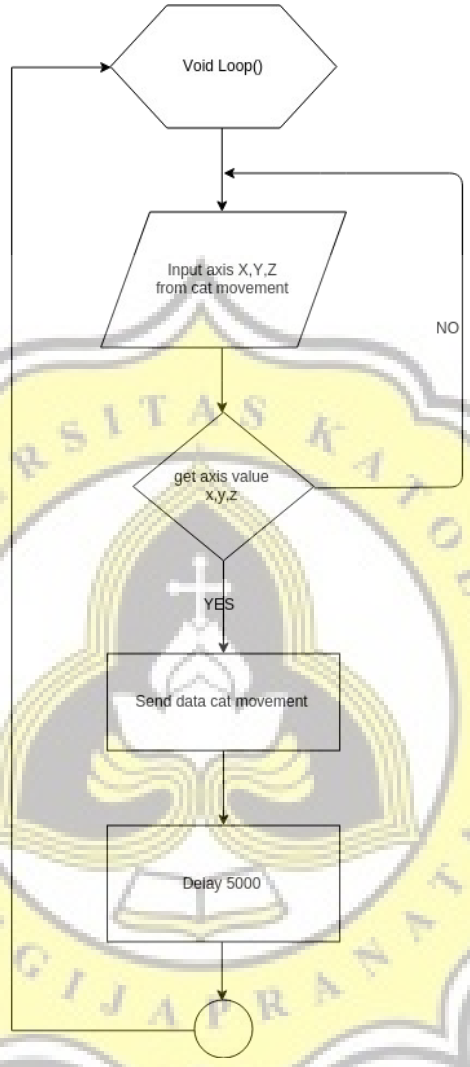

Illustration 4.1: Flowchart Vest

Flowchart explains the data extract process from gyroscope sensor into database. Cat which wore vest with sensors then cat move, its movement recorded into input process x, y and z axis, after input process succeed it will go into database which has sent through esp8266 wifi module and stored to the server. The data in database automatically redo the input process when data fail to get value x, y and z axis. Data inside database can be analyzed.

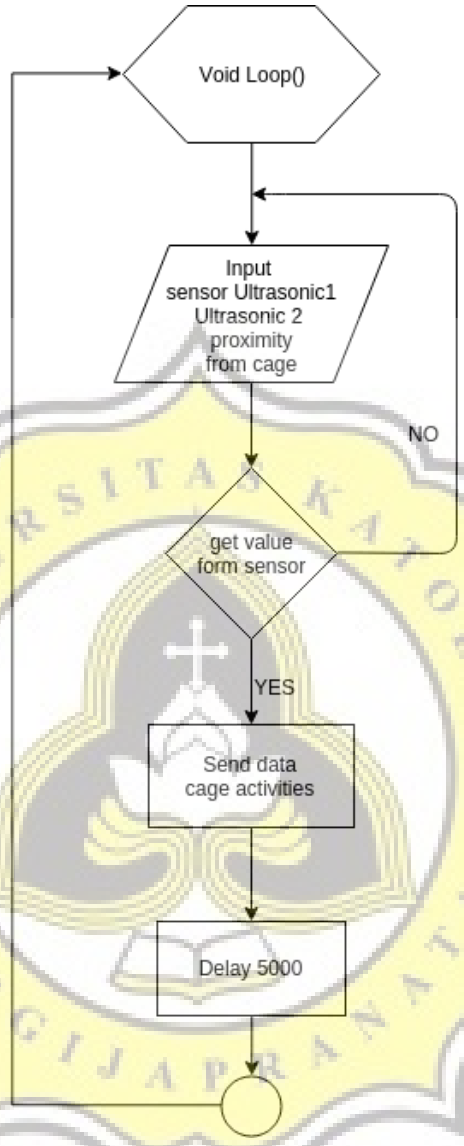

Illustration 4.2: Flowchart Cage

Flowchart describes the process of retrieving data in a cat cage. The process of retrieving data from a proximity sensor, and two ultrasonic sensors will be stored in the database and if the process is not successful then will not stored to database. After the successful retrieval will be sent to the server using the esp8266 wifi module. The sensor will record every five second.

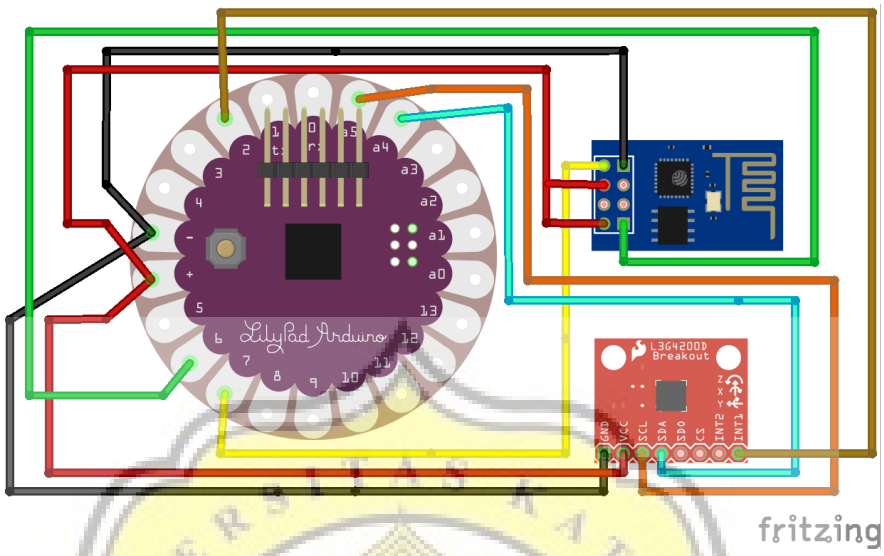

Illustration 4.3: Vest Circuit

Circuit design for cat vest in illustration 4.2.1 which used gyroscope sensor and modul wifi esp8266. Arduino lilypad gives power using (+)(-) for all sensor and become the control of sensor.

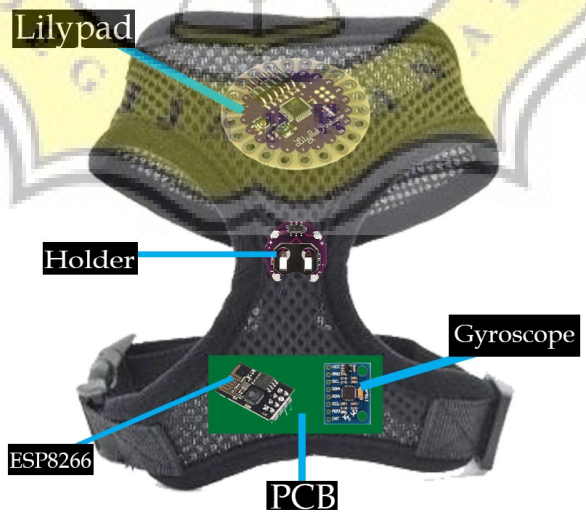

Illustration 4.4: Vest Design

Illustration 4.4 design of cat vest. Arduino lilypad sewn on the vest. The pcb consists of a sensor gyroscope and esp8266 which are sewn on the vest. Experiment project for cat vest using Arduino Lilypad as microcontroller because it is lightweight. To provide voltage to the sensor on the cat vest using Powerbank. The powerbank has a voltage of 5 volts so making the wifi module esp 8266 becomes hot and the powerbank is too heavy to fit on the body of the cat. Then try the Lipo RC JJRC H36 battery with 3.7volt. Using a lipo battery to the program can run smoothly to get data, the wifi module esp8266 is not easy to be heat and it is not heavy for the cat. The gyroscope sensor and the esp8266 wifi module are placed on the pcb to make it easier to install the cable to the Arduino Lilypad.

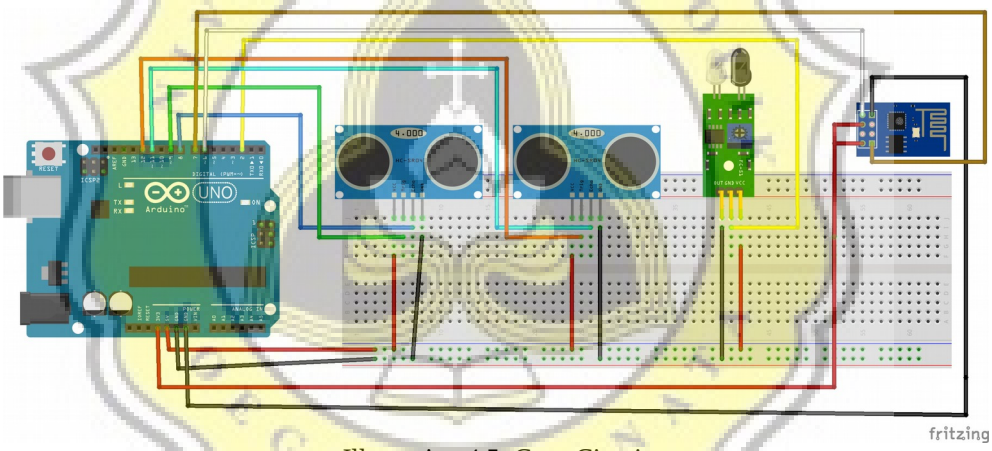

Illustration 4.5: Cage Circuit

Circuit design for cage used two ultrasonic sensor, one proximity sensor and esp8266 wifi module. These sensors had given 5volt use powerbank. Arduino uno as microcontroller, because has a lot of pins which is also can used for tree sensors and one wifi module.

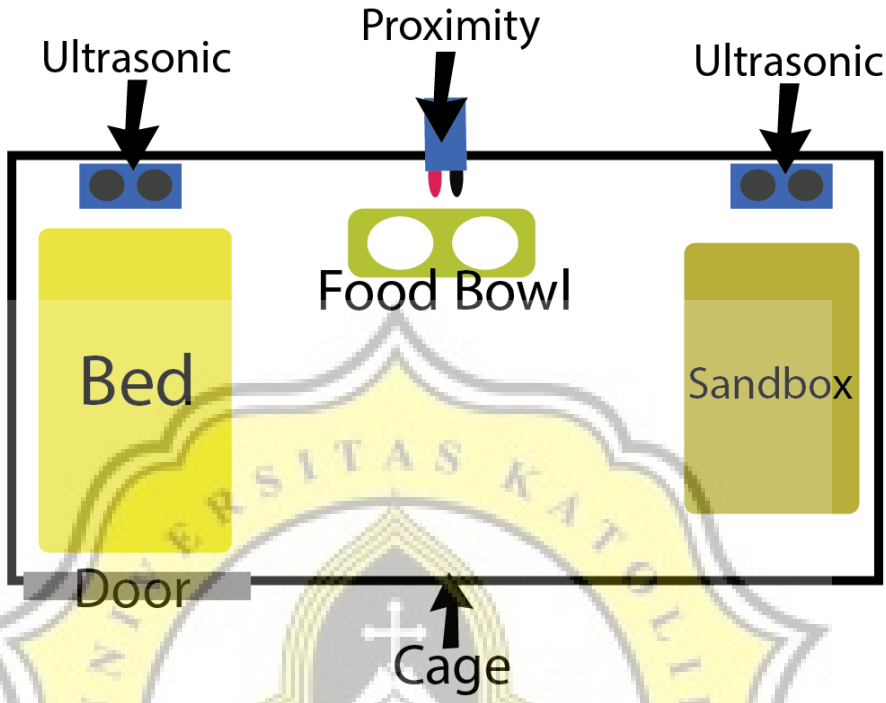

Illustration 4.6: Cage Design

Illustration 4.6 design for placing sensors on the cage. Ultrasonic sensors are placed on bed and sandbox. Proximity sensors are placed in food bowl. Cat cage using the Arduino Uno as microcontroller, have many pins so that all sensors can be used. The sensors placed on Arduino Uno are three, that is : two ultrasonic and proximity. The power for the sensor in the cat cage use powerbank. Power Bank with a voltage of 5 volts makes all sensors can run and gets data from all sensors.