CHAPTER 4
ANALYSIS AND DESIGN

4.1 Analysis

The microcontroller used for this project is the Arduino WifiShield. There are some tools used by this project, Arduino Wifishield, optocoupler sensors, disk encoder, INA219 sensor, HMC5883L, DC generator, powerbank, step up DC USB. Then, the optocoupler sensor is used to calculate the speed and as a determinant in measuring battery charging. If speed rotation on generator DC decreases will affect the resulting current will decrease and slow down battery charging. To detect the current on battery charging used INA219 sensor. In the current and voltage generated DC generator is not directly filled the battery because it is too small voltage and can not for battery charging, therefore this project requires step up DC USB in order to raise and stabilize the incoming voltage from dc generator.

4.2 Design

4.2.1 Flowchart

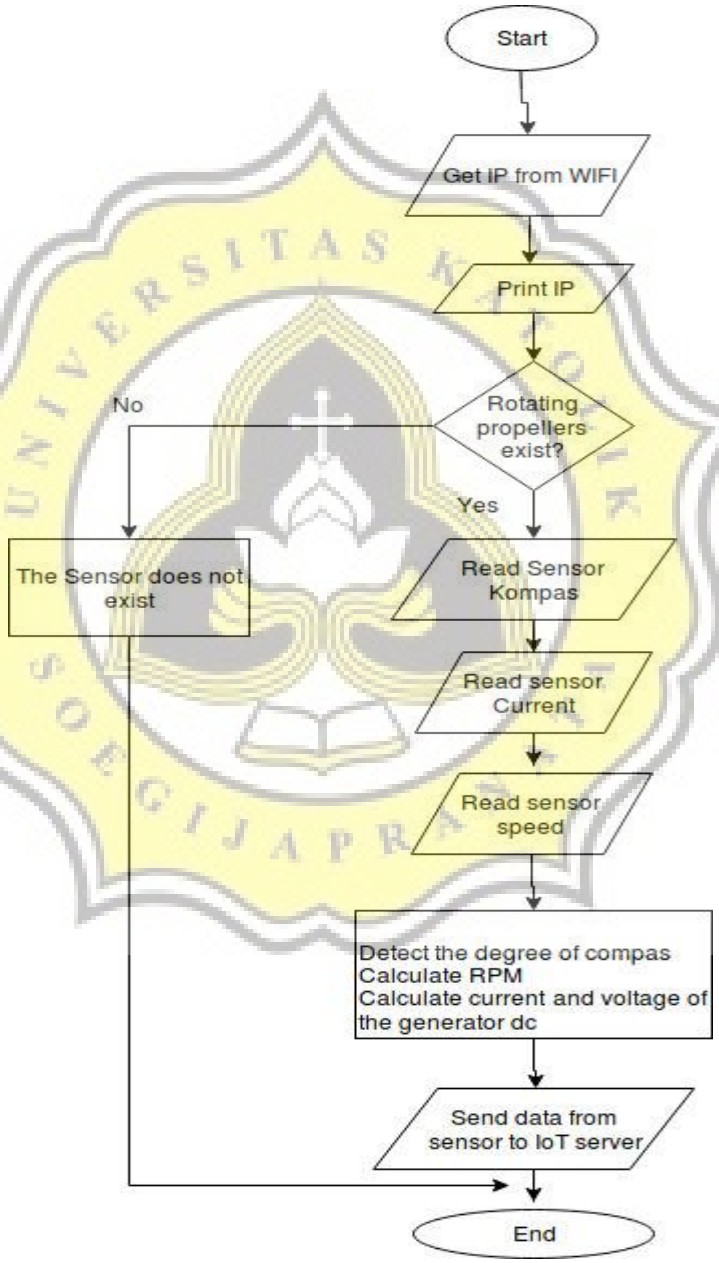

Illustration 4.1: Flowchart

The first program starts from arduino wifi shield that is requesting IP from router. Arduino wifi shield will connect to wifi. After that, the compass sensor will detect the degree of wind direction. The current sensor will read and calculate the current and voltage in the process of charging the battery. Next step is to read the speed sensor that will calculate the rotation of the disk encoder that will calculate the RPM speed. After that, the data from the sensor will be sent to IoT Thingspeak server.

4.3 Desain Schematic

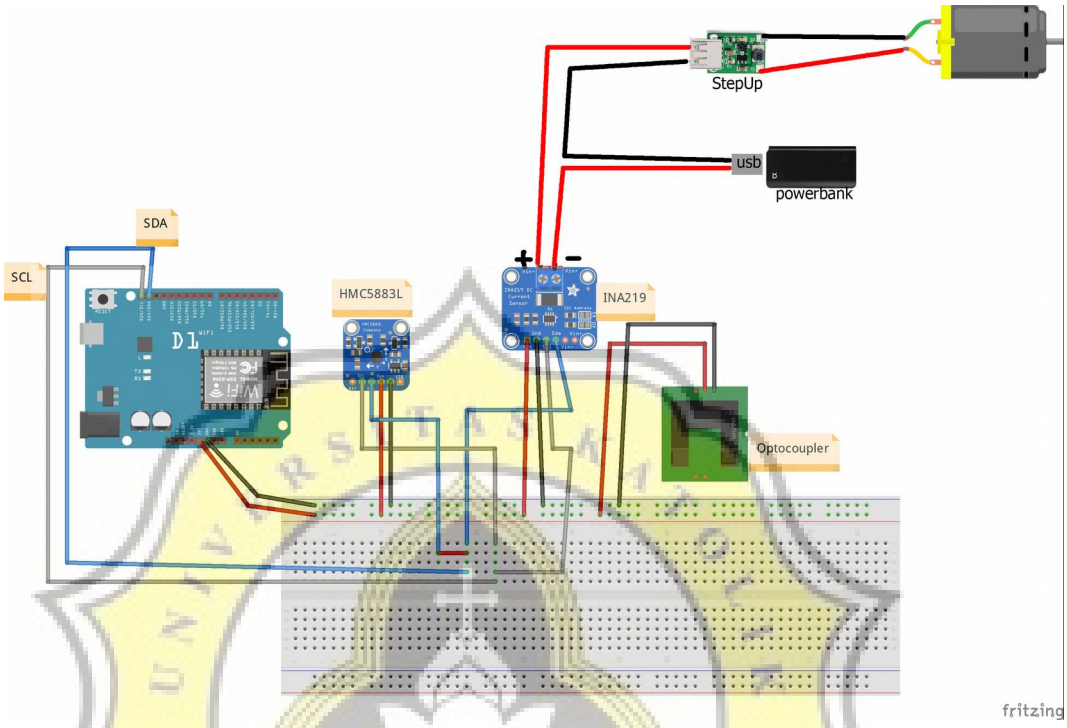

Illustration 4.2: Design schema

Information:

Pin arduino wifi shield used in this project are 11 pins. That is D11, D12, D2, A4, A5, SDA, SCL, TXD, RXD, VCC, GND. The Optocoupler sensor has 3 pins. That is VCC, GND, and Vout. Sensor INA219 has 4 pins. That is VCC, GND, SCL, SDA, Vin -, and Vin +. HMC5883L has 4 pins. That is VCC, GND, SCL, and SDA.

The assembly of this machine as follows:

D2 - Voult (sensor optocoupler).

D10 - TXD (Wifi).

D11 - RXD (Wifi).

A4 - SDA (HMC5883L).

A5 - SCL (HMC5883L).

SCL - SCL (INA219).

SDA - SDA (INA219).

Motor DC (Positive) - (negative) step up will be connected to USB.

Motor DC (negative) – (positive) from step up to pin Vin + sensor ina219.

INA219 (negative) – (positive) from usb.

VCC - Breadboard (+).

GND - Breadboard (-).