DAFTAR NOTASI

Struktur Atas :

A_C	=	luas penampang balok pratekan
A'_C	=	luas penampang komposit
A_g	=	luas penampang beton
A_V	=	luas penampang sengkang
A_s	=	luas tulangan
b_{eff}	=	jarak efektif antar gelagar
b_w	=	lebar bidang kontak antara balok prategang dengan plat beton
CR	=	kehilangan gaya prategang akibat rangkak beton
Δ	=	lendutan balok
e	=	eksentrisitas
E_c	=	modulus elastisitas beton
E_s	=	modulus elastisitas baja tulangan
d	=	jarak serat tertekan (pada plat lantai) ke tulangan tarik
D	=	gaya geser
DDT	=	daya dukung tanah
F	=	gaya prategang
F_o	=	gaya prategang efektif
f_c'	=	kuat tekan beton
f_y	=	tegangan leleh tulangan baja
I_x	=	momen inersia tiap penampang
$I_{komp.}$	=	momen inersia penampang komposit
ITP	=	Indeks Tebal Perkerasan
K	=	beban kejut
K_a	=	jarak kern dari titik berat untuk serat atas
K_b	=	jarak kern dari titik berat untuk serat bawah
K_a'	=	jarak kern dari titik berat untuk serat atas setelah komposit
K_b'	=	jarak kern dari titik berat untuk serat bawah setelah komposit

LEA = Lintas Ekivalen Awal

LEP = Lintas Ekivalen Permulaan

LER = Lintas Ekivalen Rencana

LET = Lintas Ekivalen Tengah

M_C = momen yang bekerja pada penampang komposit

M_D = momen akibat beban mati

M_L = momen akibat beban hidup

M_G = momen akibat gelagar

M_u = momen ultimit

M_T = momen akibat beban total

m_b = ratio modulus penampang dari bagian pracetak terhadap penampang komposit untuk serat bawah

n = ratio modulus (E_s / E_c)

P_i = gaya-gaya pada waktu pelaksanaan

P_L = beban hidup terpusat

RH = kelembaban relatif

SH = kehilangan gaya prategang akibat susut beton

SR = gaya akibat susut dan rangkak

Tm = gaya akibat perubahan suhu (selain susut dan rangkak)

$V_{u,h}$ = tegangan geser horisontal

Y_a = jarak titik berat terhadap serat atas

Y_b = jarak titik berat terhadap serat bawah

Y_a' = jarak titik berat terhadap serat atas pada penampang komposit

Y_b' = jarak titik berat terhadap serat bawah pada penampang komposit

Struktur Bawah :

A = beban angin

Ah = gaya akibat aliran dan hanyutan

Ahg = gaya akibat aliran dan hanyutan pada waktu gempa

A_v = luas penampang sengkang

c = nilai kohesi tanah

e	=	eksentrisitas
E	=	koefisien gempa
f	=	total friction
fs	=	koefisien gesek
f_y	=	tegangan leleh baja tulangan baja
γ_t	=	berat jenis tanah
G_g	=	gaya gesek antara tumpuan dengan balok
G_h	=	gaya akibat gempa
G_l	=	beban hidup konstruksi atas
(H+K)	=	beban hidup dengan kejut
H_w	=	beban angin
M	=	beban mati
n	=	jumlah tendon
q	=	nilai conus
Rm	=	gaya rem
T_a	=	tekanan tanah aktif
T_{ag}	=	tekanan aktif akibat gempa
Tb	=	gaya tumbuk
Tu	=	gaya angkat (buo yancy)
W_D	=	beban mati
W_L	=	beban hidup
q_{ult}	=	daya dukung keseimbangan (*ultimate bearing capacity*)
N_c, N_q, N_γ	=	faktor daya dukung tanah yang tergantung pada besarnya sudut perlawanan geser (Ø)

DATA SONDIR DAN DATA SPT

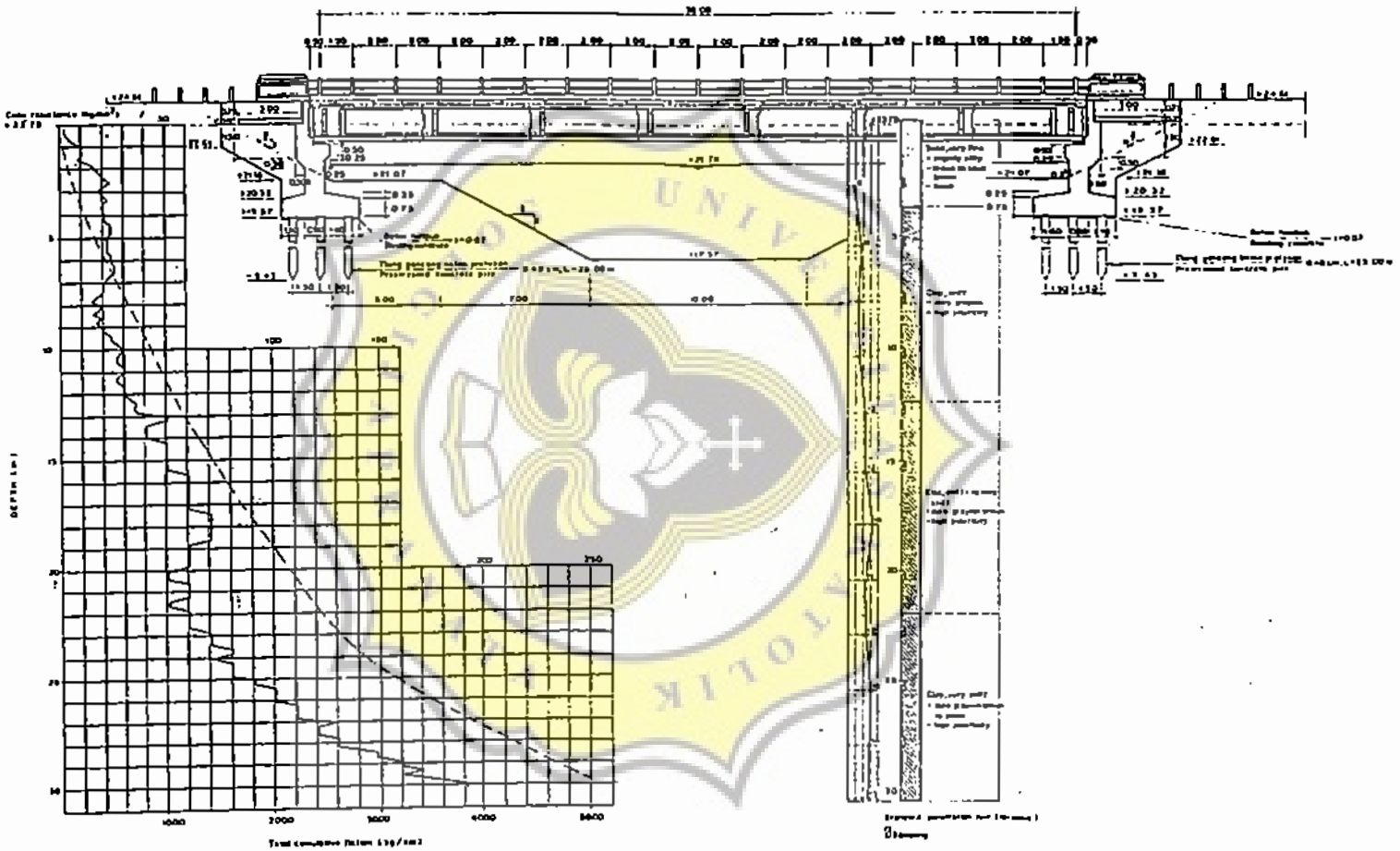

Tabel 1

Koefisien-koefisien untuk menghitung tegangan tanah.

$\frac{a}{x}$	C 1	C 2	C 3
0	1,000	0,000	0,000
0,1	1,053	0,030	0,053
0,2	1,111	0,062	0,111
0,3	1,176	0,099	0,176
0,4	1,250	0,140	0,250
0,5	1,333	0,187	0,333
0,6	1,429	0,241	0,429
0,7	1,538	0,302	0,538
0,8	1,667	0,375	0,667
0,9	1,818	0,460	0,818
1,0	2,000	0,562	1,000
1,1	2.200	0,680	1,210
1,2	2,400	0,809	1,440
1,3	2,600	0,950	1,690
1,4	2,800	1,102	1,960
1,5	3,000	1,264	2,250
1,6	3,200	1,439	2,560
1,7	3,400	1,624	2,890
1,8	3,600	1,821	3,240
1,9	3.800	2,029	3,610
2,0	4,000	2,248	4,000
2,1	4,200	2,478	4,410
2,2	4,400	2,720	4,840
2,3	4,600	2,973	5,290
2,4	4,800	3,237	5,760
2,5	5,000	3,512	6,250

entukan jarak garis netral.

menentukan jarak garis netral

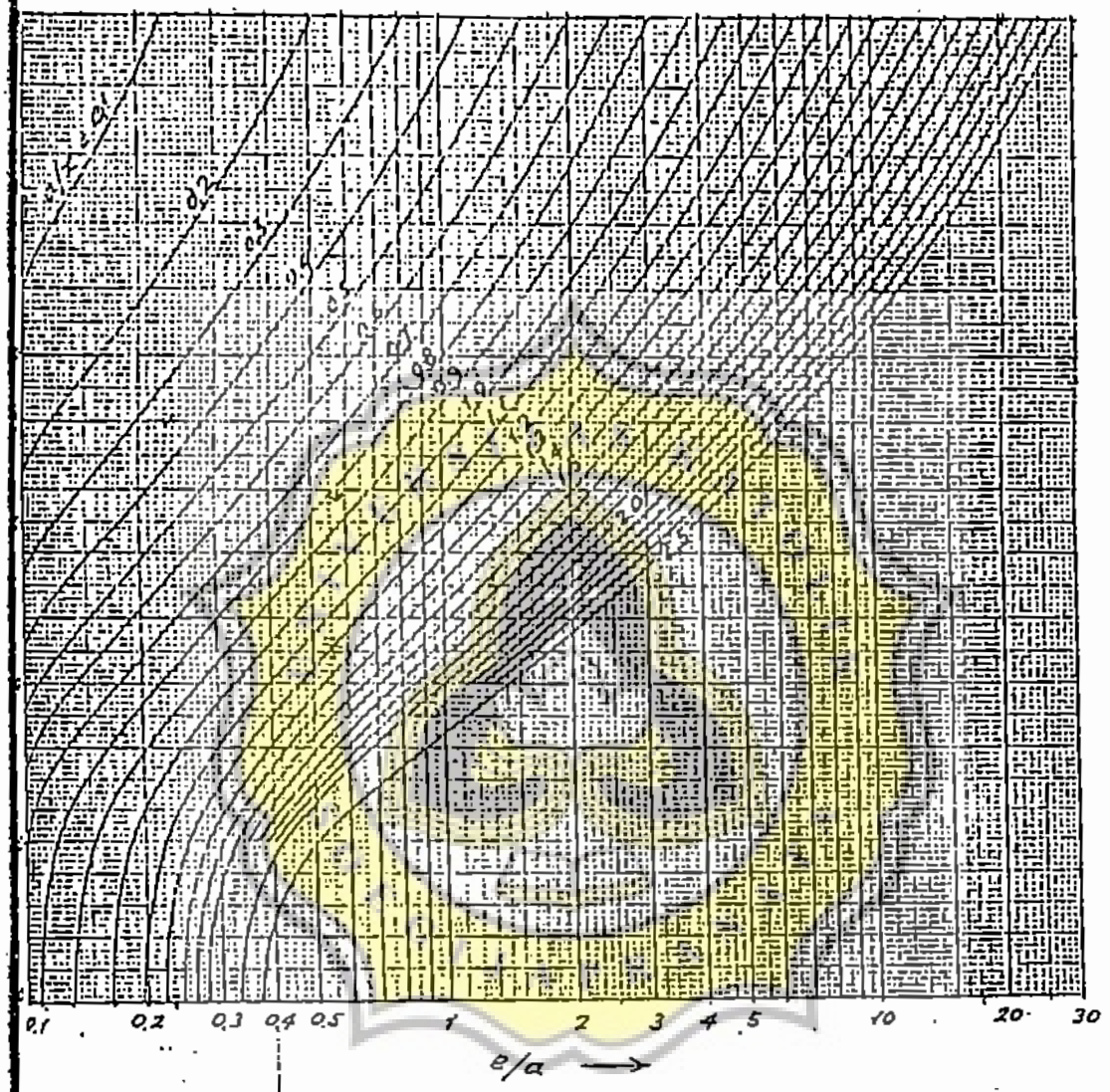

disimpulkan, maka prosedur perhitungan adalah sebagai berikut. Tentukan ukuran blok pondasi dengan memperhatikan keadaan tanah setempat kemudian beban vertikal total No (termasuk berat sendiri blok pondasi) dasar alas. Hitung momen akibat beban luar di titik putar MT. Dari pers. didapat e. Hitung tegangan rata-rata pvr dan phr menurut pers. (27) dan

acteristic Compressive Strength of Concrete. xteristic compressive strength of concrete F'_c as specified by the designer for prestressed embers and determined from standard cy- shall not be less than:†

a. for pretensioned members, or
b. for post-tensioned members.

its shall not apply to the non-prestressed por- mposite construction.

acteristic compressive strength F'_c shall be on the drawings.

imum Compressive Strength of Concrete at The compressive strength at transfer, F'_{ci}, specified not less than:

a. for pretensioned members, or
b. for post-tensioned members.

imum compressive strength required at transfer ndicated on the drawings.

Characteristic Indirect Tensile Strength of Con- characteristic indirect tensile strength (splitting strength) of concrete F'_{cs} should preferably mined by test.*

st results are not available, a value of 0.40 ay be assumed.

Characteristic Flexural Tensile Strength of The characteristic flexural tensile strength s of rupture) of concrete F'_{cf} should prefer- determined by test.**

test results are not available, a value of 0.60 ay be assumed.

---

test procedures reference should be made to 1012, Part 1, Method for sampling fresh concrete, 8, Method for making and curing concrete pression, indirect tensile and flexure test speci- ns and Part 9, Method for the determination of compressive strength of concrete specimens. ptance criteria for concrete shall be specified the road authority.

or test procedures reference should be made to S 1012, Part 1, Method for sampling fresh con- ete, Part 8, Method for making and curing con- ete compression, indirect tensile and flexure st specimens and Part 10, Method for the deter- ination of indirect tensile strength of concrete linders.

6.2.12 Modulus of Elasticity of Concrete.* The instantaneous modulus of elasticity of normal-weight concrete E_{ct} at any time t, shall be calculated from the formula:

$$E_{ct} = 6200\sqrt{F'_{ct}}$$

Fig. 6.4 may be of assistance in estimating the value of F'_{ct} at any time up to 28 days.

The instantaneous modulus of elasticity of concrete E_c at an age of 28 days may be taken as:

$$E_c = 6200\sqrt{F'_c}\ ††$$

For various design considerations the specified values of modulus of elasticity in Table 6.1 shall be used.

6.2.13 Modulus of Rigidity of Concrete. The modulus of rigidity of concrete G_c may be taken as 0.4 E_c, which corresponds to a Poisson's ratio of approximately 0.2.

6.2.14 Coefficient of Thermal Expansion of Concrete. Unless specific test data indicates otherwise, the coefficient of thermal expansion for normal-weight concrete may be taken as 11×10^{-6} per °C.#

** For test procedures reference should be made to AS 1012, Part 1, Method for sampling fresh concrete, Part 8 Method for making and curing concrete compression, indirect tensile and flexure test specimens and Part 11, Method for the determination of the flexural strength of concrete flexure test specimens.

*** For test procedures reference should be made to AS 1012, Part 17, Method for the determination of the static chord modulus of elasticity and Poisson's ratio of concrete specimens. E_{ct}, for lightweight concrete may be determined from the formula:

$$E_{ct} = 0.043\sqrt{w^{1.5}F'_{ca}}$$

where w is the density of concrete and F'_{ca} is the average compressive strength of concrete at time t.

†† This expression shall also be used for the modulus of elasticity of concrete of an age greater than 28 days. The elastic modulus obtained from this expression is the static cord modulus at a stress of 40 percent of the average compressive strength.

The coefficient of thermal expansion is largely influenced by the type of aggregate used in the concrete. For normal-weight concrete it can vary from 7×10^{-6} per °C (for limestone aggregates) to 12×10^{-6} per °C (for quartzite aggregates).

Stresses for Abnormal Vehicle Loading shall be limited to the values given below.

Maximum compressive stress . . . . . $0.60\,F'_c$

Maximum tensile stress:

(i) For monolithic members in which

-- pretensioned tendons are well distributed throughout the tensile zone, or

post-tensioned bonded tendons are supplemented by nominal non-prestressed reinforcement located near the tension face . . . . . $0.50\sqrt{F'_c}$ **

(ii) For segmental members at unreinforced joints . . . . . zero ***

(iii) For monolithic members in which calculated non-prestressed reinforcement is provided to control cracking, allowable stresses in excess of $0.50\sqrt{F'_c}$ shall be approved by the road authority considering the acceptable crack width.

Principal tensile stress. . . . . $0.33\sqrt{F'_c}$

Stresses during Handling, Transport and Erection. Stresses during handling, transport and erection after allowing for immediate and time-dependent losses (Article 6.5.1) up to the time of relevant operation, shall not exceed those given in Article 6.4.1 (a), provided that for F'_{cp} the actual strength of the concrete at the time of handling, transport or erection is substituted in the above expressions.

Anchorage Bearing Stresses. Bearing stresses on concrete surfaces behind the tendon anchor plates should not exceed the lesser of the values given by:

$$0.60\,F'_{cp}\sqrt{\frac{A_c}{A_b}} \quad \text{or} \quad 2F'_{cp}$$

Higher bearing stresses shall only be used when they have been proved by tests to be satisfactory.

** When unbonded tendons are used consideration shall be given to reducing this maximum tensile stress.

*** When unbonded tendons are used in segmental members with unreinforced joints, consideration shall be given to ensure a residual compressive stress.

The above bearing stresses shall be calculated using the jacking force P_j, (Fig. 6.9).

(j) *Bearing Stresses other than at Anchorages.* Average bearing stresses on concrete surfaces other than those specified in (h) shall not exceed the values given below.

(i) With non-prestressed reinforcement designed in accordance with Article 6.6.9.4:

-- not subjected to high edge loading by the bearing plate . . . . . $0.35F'_c$

- subjected to high edge loading by the bearing plate . . . . . $0.25F'_c$

(ii) Without non-prestressed reinforcement or with nominal non-prestressed reinforcement placed adjacent to the contact surface, only two-thirds of the values given in (i) shall be used.

The above allowable bearing stresses may be multiplied by $\sqrt{(A_c/A_b)}$, but not more than 2.

6.4.2 Lightweight Concrete[1,4] Stresses for lightweight concrete shall be specified by the road authority concerned.

6.4.3 Prestressing Tendons†. The jacking stress f_{sj} in a prestressing tendon, due to jacking force P_j (Fig. 6.9), shall not exceed the following values.

(a) Wire or strand, stress-relieved, either normal or low-relaxation. Alloy steel bars.

Post-tensioned member. . . . . $0.85F'_s$

Pretensioned member . . . . . $0.80F'_s$

(b) Strand, not stress-relieved.

Post-tensioned member. . . . . $0.77F'_s$

Pretensioned member . . . . . $0.80F'_s$

The maximum value of the stress f_{si} (Fig. 6.9) in a prestressing tendon immediately after transfer (i.e. after allowing for immediate losses, Article 6.5.1), shall not exceed the values given below.

(c) Wire or strand, stress-relieved, either normal or low-relaxation. Alloy steel bars. . . . . $0.75F'_s$

---

† Reference is made to Appendix 6B regarding the types of tendon used for prestressing.

l not stress-relieved . . . . . $0.70F'_s$

restressed Reinforcement.. Maximum com- tensile stresses in non-prestressed rein- all not exceed those specified in Section

F PRESTRESS

al. Allowance shall be made for loss of to the following, where applicable:

ic deformation of the concrete.

rkage of the concrete.

p of the concrete.

xation of the prestressing tendons.

ion in the jack, the anchorage, and either duct or at any other tendon support.

oring.

(v) and (vi) occur up to and including the nsfer and are referred to as the immediate hile losses (ii), (iii) and (iv) occur after the nsfer or casting and are referred to as the dent losses. The sum of these immediate and dent losses may give an estimated value the actual. For a more precise assessment, of one loss on the others and the stage at occurs should be considered.

segmental members, immediate and time- losses also occur due to elastic deformation, nd creep of the cast-in-place concrete joints.

ened members an additional loss of prestress due to changes in ambient temperature be- time of stressing the tendon and the time he concrete.

nical values given herein for calculating the recommended for the design of prestressed embers under normal conditions. It should that some adjustment of these values may ay in estimating the total loss of prestress l conditions of exposure or where new pro- aterials are introduced.

inary design, the following percentage loss force at working load, excluding friction, sumed:

Pretensioned work — 30 percent.
Post-tensioned work — 25 percent.

6.5.2 Loss of Prestress due to Elastic Deformation of the Concrete. Calculation of the immediate loss of stress in prestressing tendons due to elastic deformation of the concrete at transfer shall be based on:

(i) the instantaneous modulus of elasticity of concrete at the time of stressing E_{ct} obtained by substituting F'_{cp}, the transfer strength, for F'_{ct}, in the formula of Article 6.2.12, and

(ii) the modulus of elasticity E_s of tendons given in Article 6.2.16, Table 6.2.

For pretensioned members the loss of stress may be taken as the product of the modular ratio, E_s/E_{ct}, and the stress in the concrete adjacent to the tendons at transfer f_{cd} at the section considered.

For post-tensioned members with tendons not stressed simultaneously, there is a progressive loss of prestress during transfer due to the sequential application of prestressing force. For members in which the tendons are identical the average loss of stress in each tendon may be taken as $(N-1)/2N$ times the product of the modular ratio E_s/E_{ct} and the stress due to all the tendons in the concrete adjacent to the tendons at transfer f_{cd} averaged along the length of the member. The loss in individual tendons may be computed more exactly by considering the sequence of tensioning.

In calculating the above loss for pretensioned or post-tensioned members it is usually sufficient to consider the concrete stress at the centroid of the tendon group.

6.5.3 Loss of Prestress due to Shrinkage of the Concrete[5,6].

(a) *General.* In structures for which an accurate assessment of the shrinkage is required it will be necessary to test* the materials to be used.

For general design purposes shrinkage shall be estimated using the following method, provided that aggregates having characteristics leading to high shrinkage are excluded[7] and the concrete is made from Portland cement. It is also assumed that the average ambient temperature during the period under consideration is between 0°C and 45°C. Temperature peaks of short duration are assumed to be within the range of − 20°C to + 60°C.

---

tensioned members the relaxation loss (iv) ing prior to transfer, Article 6.5.5 (b) (ii), is nediate loss.

* For test procedure reference should be made to AS 1012, Part 13, Method for the determination of drying shrinkage of concrete

The shrinkage strain ϵ_{st} of moist-cured, normal weight concrete at constant humidity for any time t_{tt} is determined by the following formula:

$$\epsilon_{st} = \epsilon_b \, k_h \, k_e \, k_p \, k_{tt}$$

The ultimate shrinkage strain ϵ_{stt} at the end of time-dependent deformation may be expressed by:

$$\epsilon_{stt} = \epsilon_b \, k_h \, k_e \, k_p$$

The shrinkage strain for any time interval, t_i to t_{tt}, is equivalent to:

$$\epsilon'_{st} = \epsilon_b \, k_h \, k_e \, k_p \, (k_{tt} - k_{ti})$$

For a pretensioned member the subscript t_i represents the time of casting and is therefore zero, while for a post-tensioned member t_i represents the time of transfer measured from casting. For both pretensioned and post-tensioned members t_{tt} represents the time at which the shrinkage strain is to be estimated.

The time-dependent loss of stress in prestressing tendons due to shrinkage is calculated as the product of the modulus of elasticity E_s of the tendons given in Article 6.2.16, Table 6.2 and the shrinkage strain ϵ'_{st}.

(b) *Coefficient* ϵ_b. The coefficient ϵ_b — the basic shrinkage strain — depends on climatic conditions and is given in Table 6.4.

The values given for ϵ_b are valid for moist-cured, normal-weight concrete. The appropriate values for low pressure steam-cured or light-weight concretes shall be specified by the road authority concerned on the basis of tests. Generally the basic shrinkage strain ϵ_b for low pressure steam-cured concrete is 10 to 30 percent lower, while ϵ_b for moist-cured, light-weight concrete is about 20 to 40 percent higher, than that of moist-cured, normal-weight concrete of equal compressive strength.

(c) *Coefficient* k_h. The coefficient k_h depends on the water-cement ratio and the cement content

TABLE 6.4

VALUES OF COEFFICIENT ϵ_b

Climatic condition	Average relative humidity as a percentage**	Basic shrinkage strain ϵ_b
Dry air	< 50	600×10^{-6}
Generally in the open air, and not subject to periods of prolonged high temperature or low humidity	50 to 75	400×10^{-6}
In very humid air, e.g. over water	> 75	200×10^{-6}
In water	100	0

** For determining the basic shrinkage strain ϵ_b, the "average index of mean relative humidity" given in the reference shall be used.

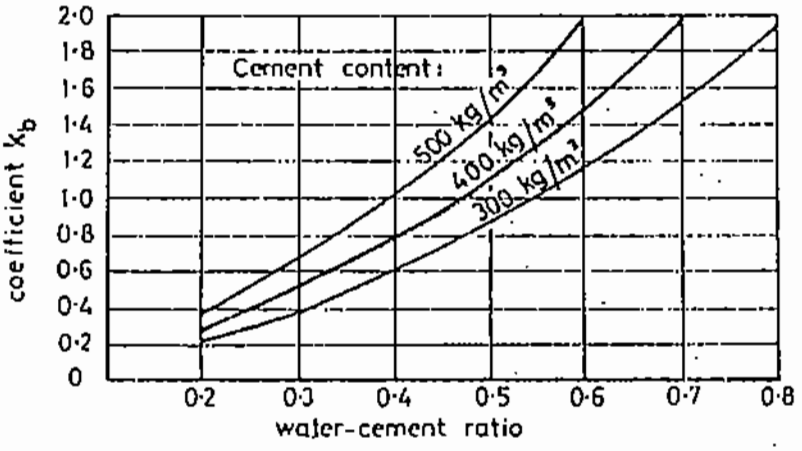

FIGURE 6.1 VALUES OF COEFFICIENT k_h

the concrete. For the usual high-strength, normal-weight, moist-cured concrete used in prestressed concrete structures with a water-cement ratio of about 0.40 and cement content 400 to 450 kg/m³, an average value of 0.90 may be used. More accurate values of k_h for the whole range of variables are given in Fig. 6.1.

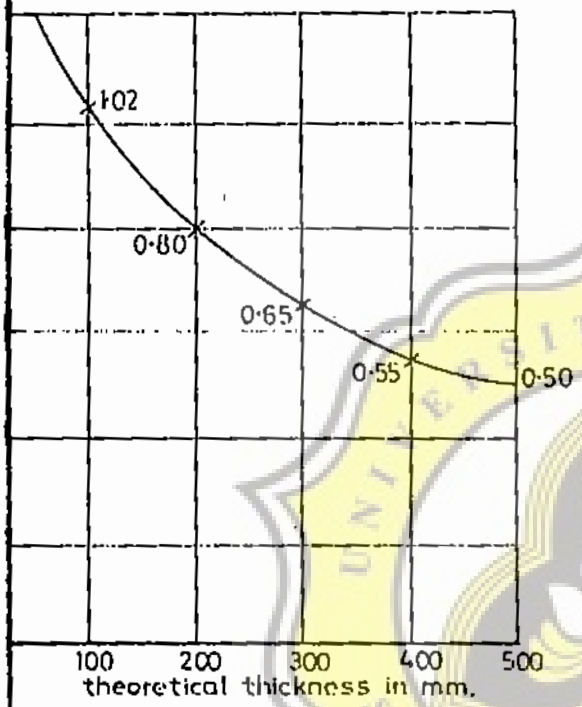

FIGURE 6.2 VALUES OF COEFFICIENT k_c

(d) *Coefficient* k_c. The values of the coefficient k_c are given in Fig. 6.2. This coefficient, which is related to the ratio of concrete volume to the drying surface area, is given in terms of the theoretical thickness of the member e_m being equal to twice the area of its cross-section, divided by its perimeter. For any member the perimeter shall be taken as the sum of the perimeter exposed directly to the atmosphere plus one-half of the perimeters of any voids contained within the section (e.g. single-cell or multi-cell box girders).

The appropriate values of e_m for standard precast I-beam sections are given in Fig. 6.26 of Appendix 6A. If the cross-section is not constant along the member an average theoretical thickness shall be calculated using an appropriate number of sections. When e_m exceeds 500 mm k_c shall be taken as 0.50.

(e) *Coefficient* k_p. The coefficient k_p expresses the restraining effect of the longitudinal non-prestressed reinforcement on the shrinkage of a prestressed member and shall be calculated using the following formula:

$$k_p = \frac{100}{100 + 20p}$$

(f) *Coefficient* k_t. The coefficient k_t is the ratio of the shrinkage strain ε_{st} at time t_d to the ultimate shrinkage strain ε_{su}. Various k_t curves for a range of theoretical thicknesses are given in Fig. 6.3.

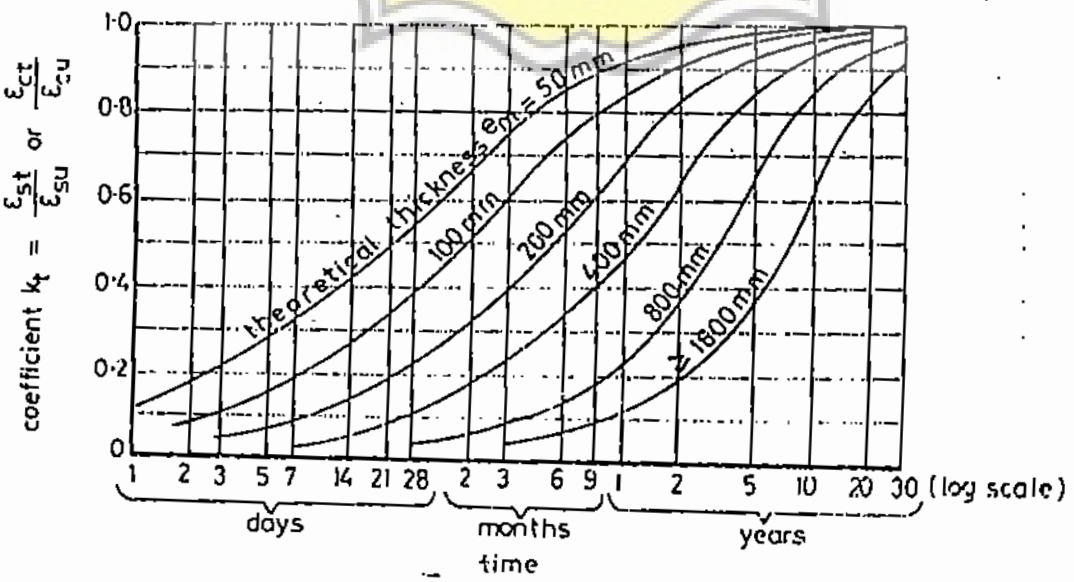

FIGURE 6.3 VALUES OF COEFFICIENT k_t

Loss of Prestress due to Creep of the Con-[5,6,9,10]

(a) *General.* In structures for which an accurate assessment of creep is required it will be necessary to test† the materials to be used.

For general design purposes creep shall be estimated using the following method, provided that for aggregate type [7,10], cement type and ambient temperature the same restrictions apply as for shrinkage in Article 6.5.3(a).

The creep strain, ϵ_{ct} at any time t_n, after application of the initial sustained load is determined by the following formula assuming that, in the design stress range, creep is proportional to the stress in the concrete

$$\epsilon_{ct} = \frac{f_c}{E_c'} k_b k_c k_d k_e k_m$$

In the above formula E_c' is the instantaneous modulus of elasticity of concrete at an age of 28 days (Article 6.2.12) and t_n indicates the time at which creep strain is to be estimated.

The ultimate creep strain ϵ_{cu} at the end of the time-dependent deformation may be expressed by the following formula

$$\epsilon_{cu} = \frac{f_c}{E_c'} k_b k_c k_d k_e = \frac{f_c}{E_c'} \varphi_u = \epsilon_e \varphi_u$$

where the ultimate creep factor φ_u is equivalent to

$$\varphi_u = \frac{\epsilon_{cu}}{\epsilon_e} = k_b k_c k_d k_e$$

Similarly the creep factor φ_t at any time t_n is given by

$$\varphi_t = \frac{\epsilon_{ct}}{\epsilon_e} = k_b k_c k_d k_e k_m$$

The time-dependent loss of stress in prestressing tendons due to creep of moist-cured, normal-weight concrete is calculated as the product of the modulus of elasticity of the tendon E_s given in Article 6.2.10, Table 6.2 and the creep strain of the concrete adjacent to the tendons ϵ_{ct} computed from the formula above. It is usually sufficient to work with the concrete stress at the centroid of the tendon group.

(b) *Coefficient k_b.* The values of coefficient k_b are given in Article 6.5.3 (e).

(c) *Coefficient k_c.* The coefficient k_c depends on climatic conditions and is given in Table 6.5.

TABLE 6.5

VALUES OF COEFFICIENT k_c

Climatic condition	Average relative humidity as a percentage*,**	k_c
Dry air	< 50	3.0
Generally in the open air, and not subject to periods of prolonged high temperature or low humidity.	50 to 75	2.5
In very humid air, e.g. over water	> 75	1.5
In water	100	1.0

The above values for k_c are valid for moist-cured, normal-weight concrete. The appropriate k_c values for lightweight concretes shall be specified by the road authority concerned on the basis of tests.**

For low pressure steam-cured, normal-weight concrete the above k_c values may be used.

(d) *Coefficient k_d.* The coefficient k_d depends on the age or degree of hardening of concrete F_{cp}'/F_c' at the time of application of the sustained load (e.g. prestress) and is shown in Fig. 6.4 for concretes made of normal and high early strength Portland cement.

(i) Moist-cured member. For an average curing temperature of 20°C between casting and

---

† For test procedure reference should be made to AS 1012, Part 16, Method for the determination of creep of concrete cylinders in compression.

* For determining the coefficient k_c, the "average index of mean relative humidity" given in the reference shall be used.

** As a guide, the ultimate creep strain ϵ_{cu} for lightweight concrete is about 25 to 35 percent higher than that of moist-cured, normal-weight concrete of equal compressive strength.

of the concrete, k_d is given in
the age of concrete Δt at the time
ng, while for an average curing tem-
T other than 20°C it is given in
the theoretical age $\Delta t'$. The latter
tion of the average curing tempera-
s well as the age of the concrete
ime of loading Δt, and can be com-
sing the following formula

$$\Delta t' = \frac{\Delta t\,(T^\circ + 10^\circ)}{30^\circ}$$

rage curing temperature higher than
ill result in a stronger concrete at
lication of sustained load, with a
ondingly reduced value for k_d.
lower temperature will increase this
ent.

ressure steam-cured members. For

r ultimate creep strain ϵ_{cu} for low
cured concrete is 20 to 40 percent
at of moist-cured, normal-weight
al compressive strength.

steam-cured concrete the k_d coefficient is also obtained from Fig. 6.4 using the appropriate degree of hardening of concrete F'_{cp}/F'_c which the steam-cured concrete has obtained at the time of application of the sustained load.

(e) *Coefficient* k_e. Values of the coefficient k_e are given in Article 6.5.3(d).

(f) *Coefficient* k_t. The coefficient k_t is the ratio of the creep strain ϵ_{ct} at time t_u to the ultimate creep strain ϵ_{cu}. Various k_t curves, which are the same as for shrinkage, are given in Fig. 6.3.

When an additional sustained load is applied to the structure at time t_a from the application of the initial transfer load and causes a stress increment or decrement of f_{ca}, the additional creep strain ϵ_{ctu} up to time t_u shall be separately calculated using the k_{du} and k_{tu} coefficients determined from the appropriate Δt and t_a values respectively. The k_b, k_c, k_e and k_{tu} coefficients are the same as for the initial sustained load. Therefore:

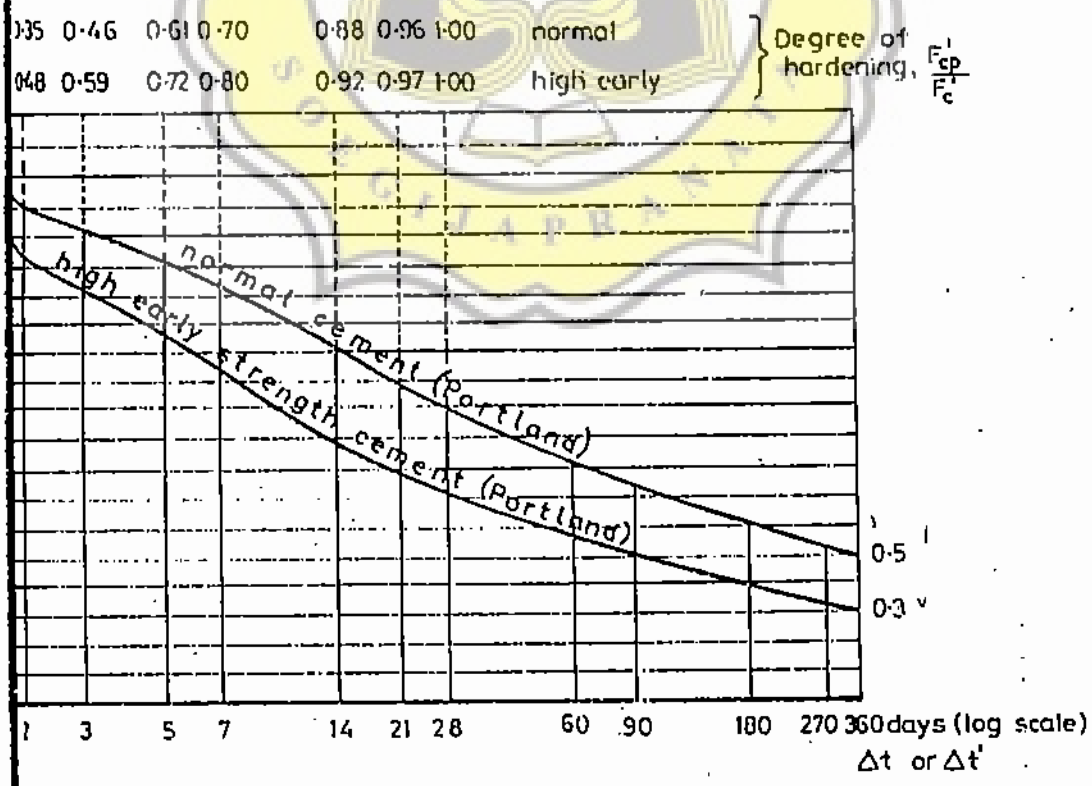

FIGURE 6.4 VALUES OF COEFFICIENT k_d

ll not exceed the allowable stresses Article 6.4.1.

ns of negative moment, stresses in n shall be computed using section s omitting the area of the cast-in-ncrete, but including the trans-rea of the non-prestressed rein-t within the effective width of n-place concrete.

reep due to sustained loads[39,40]

deals with the effect of residual the stresses in a composite member dead load and prestress only. Creep s the stresses due to differential d this case is dealt with in Article

ite member, creep occurring in the results in a redistribution of stresses beam and the cast-in-place concrete. le of these stresses depends on the recast beam when composite behav-ished. If a large proportion of the beam has taken place by the time ast, then the effect of subsequent small.

pported members.

on of stresses due to sustained loads based on the assumption that the any cross-section lie between two stress distributions, (1) and (2), s:

stress distribution due to dead load am and cast-in-place concrete) and prestress after all losses, acting on precast beam, and

stress distribution due to dead d (beam and cast-in-place concrete) prestress after all losses, acting on composite section. The member is considered to be monolithic, and eccentricity of the prestressing x is measured to the centroid of composite section.

es in the composite section, caused only by residual creep in the precast beam, are calculated as:

$(1 - e^{-\varphi_r}) \times$ [stresses in (2) − stresses in (1)], where φ_r is the residual creep factor†

which depends on the amount of creep strain that will occur after the beam and cast-in-place concrete are made composite (Table 6.11).

The final stresses in the composite section due to dead load (beam and cast-in-place concrete), prestress and creep are the sum of:

stresses from (1) above, and

stresses due to residual creep.

(ii) Continuous members††

Stresses in a continuous composite member due to dead load, prestress after all losses and creep may be calculated by considering the continuous member separated into simply supported spans, and then restoring continuity by applying restraint moments at the supports. The final stresses at any section are the sum of the following:

(1) those occurring in each simply supported span, calculated as in (i) above, and

(2) those caused by $(1 - e^{-\varphi_r})$ times the continuity restraint moments resulting from application of both the dead load and prestress to the continuous composite member as in (i) (2) above.

The restraint moments may be calculated by any method using elastic theory.††

---

ep is that portion of creep which e precast beam after establishing

† The residual creep factor may be calculated in accordance with Article 6.5.4 as:

$$\varphi_r = k_h\, k_c\, k_d\, k_e\, (1 - k_{tl})$$

where k_{tl} is the k_t factor calculated with the time t_{tl} which elapsed between stressing the beam and establishing composite action, and k_{tl} relates to the age of the beam at the time of stressing.

†† The restraint moment calculation is based on the assumption that continuity and composite action are established in all spans simultaneously at time t_{tl}. A minimum and a maximum estimated value of t_{tl} may need to be used in calculation of creep and shrinkage effects.

TABLE 6.11

FACTORS USED FOR RESIDUAL CREEP AND DIFFERENTIAL SHRINKAGE CALCULATIONS IN COMPOSITE MEMBERS

	0	0.5	1.0	2.0	3.0	4.0	5.0
φ_r	0	0.393	0.632	0.865	0.950	0.982	0.993
$\frac{\varphi_r}{\varphi_r}$	1.000	0.787	0.632	0.432	0.317	0.245	0.199

Effect of differential shrinkage. Differential shrinkage between the precast beam and the cast-in-place concrete produces stresses and deformations in both simply-supported and continuous members. Modification of these stresses due to the effect of residual creep in the precast beam is included in this Article.

(i) Simply-supported members[39,41,42]

Stresses and deformations in the composite member due to differential shrinkage may be evaluated assuming a uniform differential shrinkage force P_s along the member, where:

$$P_s = E_{cd} A_{cd} \Delta\varepsilon_{sh} \left(\frac{1 - e \quad \varphi_r}{\varphi_r} \right) 10^{-3} \dagger\dagger\dagger$$

The term $\left(\frac{1 \quad e \quad \varphi_r}{\varphi_r} \right)$ accounts for the influence of residual creep in the beam, and some values of this factor are given in Table 6.11.

The stresses in the composite section are obtained from the sum of the following effects:

- a direct tensile force of P_s acting at the centroid of the cast-in-place concrete only, and
- a corresponding compressive force of P_s at the centroid of the cast-in-place concrete, and acting on the composite section.

(ii) Continuous members[39,40]*

Stresses and deformation in a continuous composite member due to differential shrinkage may be calculated by considering the continuous member as separated into simply supported spans, and then restoring continuity by applying restraint moments at the supports. The final stresses at a cross-section are the sum of the following:

- those occurring at the section in the simply-supported span, calculated as in (i) above, and
- those caused by the continuity restraint moments.

In the cast-in-place concrete directly over piers, stresses are produced only by the continuity restraint moments.

6.6.7.4 Design for Ultimate Load

(a) General. Design of a composite member for ultimate load shall be in accordance with:

(i) Articles 6.3.4, 6.6.4 and 6.6.7.4 (b) for bending and shear, Article 6.9.3.3 for redistribution of bending moments, and

---

† differential shrinkage strain may be calculated accordance with Article 6.5.3 as:

$$\Delta\varepsilon_{sh} = \varepsilon'_b k'_h k'_c k'_p \quad \varepsilon_b k_h k_c k_p (1 \quad k_{tt})$$

ere the primed factors refer to the cast-in-place ncrete, and k_{tt} is the k_t factor calculated with time t_{tt} which elasped between casting the beam d establishing composite action.

* The restraint moment calculation is based on the assumption that continuity and composite action are established in all spans simultaneously at time t_{tt}. A minimum and a maximum estimated value of t_{tt} may need to be used in calculation of creep and shrinkage effects.

in accordance with Article 6.6.2 (a)

ckness. The minimum thickness of ttom flanges shall be 130 mm. In foot- d in Type E multi-box systems (Fig. minimum thickness shall be 145 mm.

lets or haunches shall be provided at ctions of all surfaces within the cells girder. If torsion is important in the dimension of fillets should be not the least thickness of the members the joint.

ressed Reinforcement Details. Details reinforcement shall conform with the ents:

spacing. Cover to and spacing of rein- shall be provided in accordance with

reinforcement. Transverse reinforce- he bottom of the top flange shall be beyond the faces of webs.††

ange reinforcement.†† Minimum rein- of 0.15 per cent of the flange cross- ea shall be placed at each face of the ange, in both the transverse and longi- directions. The spacings of bars shall either 300 mm, or twice the flange

reinforcement.†† Web faces shall be by longitudinal horizontal bars to hrinkage and temperature cracking. shall contain not less than 500 mm² of height of the web. The spacing of not exceed 250 mm.

reinforcement. Consideration shall be providing additional reinforcement in es or diaphragms to control cracking y occur as a result of restraint to arising from the construction se- d thermal movements during construc-

nd Drainage. Consideration shall be

does not necessarily apply to Type E ms (Fig 6.16) in which the web and s is less than 130 mm and the appro- n reinforcement requirement is pro- layer.

given to providing manholes or other openings to allow access for form removal, inspection, drainage, maintenance, etc.

6.6.8.7 Waterproofing of Deck. Consideration shall be given to providing adequate waterproofing to prevent the penetration of the box girder by surface water which can cause corrosion of the reinforcement. This is particularly important for tendons placed in zones of hogging moment in continuous box girders, especially those composed of precast segments.

6.6.9 Design of Anchorage Zones [51]

6.6.9.1 General. The anchorage zone of a prestressed concrete member is that portion of the member within which the local stresses produced by the concentrated prestressing forces disperse to a linear stress distribution.

In pretensioning systems, the transmission of the prestressing force from the tendon to the concrete is achieved mainly by bond along the transmission length of the tendon, Article 6.6.9.3 (b).

In post-tensioning systems, the prestressing force is transmitted to the concrete mainly by direct bearing of a steel anchorage plate on the concrete or other suitable anchorage devices embedded in the concrete. Some systems use ribbed anchors embedded in the concrete whose object is to distribute the prestress force along the axis of the tendon.

Two types of transverse tensile stress develop in post-tensioned anchorage zones, namely:

(a) *Bursting stresses.* Primary bursting stresses occur in zones immediately behind individual anchorages, and develop along the longitudinal axis of the tendon acting transversely in planes containing the axis of the tendon. The distribution of the primary bursting stress is given in Article 6.6.9.4 (b) (iii).

In multiple anchorage systems where groups of anchorages are sufficiently close together, secondary bursting stresses can also occur deeper in the anchorage zone.

(b) *Spalling stresses.* Spalling stresses develop around and between anchorages, and act transversely in planes parallel to, but not containing, the axis of the tendon. These stresses reach a maximum value at the face of the anchorage and are especially important when anchorages are very eccentric or widely spaced.

2 End Blocks.[53] In order to accommodate an-
ges and to reduce congestion of anchorage zone
cement in prestressed concrete members, end
s may be used.*

end blocks are used they should be at least as
as the narrower flange of the beam and have a
um length to depth ratio of 0.75.

3 Pretensioned Anchorage Zones

Anchorage zone reinforcement. Bursting reinforcement is not generally required in pretensioned members.

To control horizontal cracking sufficient vertical stirrups shall be provided to resist at least 4 per cent of the total prestressing force at transfer. To control vertical cracking the same area of steel shall be provided as horizontal stirrups. This steel shall be in addition to the vertical stirrups if control of both horizontal and vertical cracking is required. These stirrups shall be placed as spalling reinforcement in a length of 0.25 times the depth (width) of the member from the end face, with the last stirrup placed as close to the end face as practicable. Reinforcement shall be designed for an allowable stress of 125 MPa.

Where tendons are grouped or where groups of tendons are widely spaced in the vertical (or horizontal) direction at the ends of a member, additional reinforcement determined in the manner given in Article 6.6.9.4 (c) shall be added to control horizontal (or vertical) cracking in the member.[29,53]

Reinforcement shall be adequately anchored to develop the design stress of 125 MPa in the reinforcement at any critical section. Critical sections are likely to be midway between groups of tendons, or where there is an abrupt reduction in cross section, or between the tendon groups and the remaining tendon free area of the cross section.

Transmission length of pretensioned tendons. Transmission length is defined as the length at the end of a pretensioned tendon which is required to transmit the full prestressing force in the tendon to the surrounding concrete through bond.

This transmission length† shall be determined by tests simulating site conditions, but in the absence of test data they shall not be less than the values given in Table 6.12.

The minimum transmission lengths shall only be used when consideration has been given to the following factors:

(i) The values given in Table 6.12 are for gradual release of the prestressing force when the minimum compressive strength of concrete at transfer f'_{cp} is equal to or greater than 30 MPa.

(ii) The sudden release of tendons leads to a great increase in the transmission length in the member near the releasing end of the bed.

(iii) The transmission length of tendons near the top of a beam may well be greater than that for identical tendons placed lower in

TABLE 6.12

MINIMUM TRANSMISSION LENGTHS OF TENDONS

Type of tendon	Minimum transmission length
Plain wire (AS 1310)	100 × dia.
Indented wire (AS 1310)	100 × dia.
Crimped wire (AS 1310)	70 × dia.
7-wire stress-relieved steel strand (AS 1311):	
(a) Regular and super grade	
7.9 mm dia.	210 mm
9.3 mm dia.	260 mm
10.9 mm dia.	330 mm
12.5 mm dia.	380 mm
15.2 mm dia.	510 mm
18.0 mm dia.	635 mm
(b) Compact grade	
13.0 mm dia.	585 mm
15.2 mm dia.	685 mm
18.0 mm dia.	810 mm

† The transmission length depends on many factors such as:

- the size and type of tendon,
- the degree of compaction of the concrete,
- the strength of the concrete, and
- the deformation, e.g. crimp of the tendon.

* end block dimensions of standard precast prestressed concrete beam sections, reference is made to Appendix 6A.

beam, since the concrete near the top s likely to be as well compacted.

gths may be as much as two times the s given in Table 6.12.

calculation purposes it may be assumed the tendon force varies linearly from at the end face of the member, to its imum value at the end of the trans- ion length.

e tendons are intentionally prevented bonding to the concrete near the ends member by the use of sleeves or de- ing tape, the values given in Table may be used for transmission length, ming that the transmission zone com- ces at the point where debonding has stopped.

sioned Anchorage Zones

Non-prestressed reinforcement shall be in the anchorage zone of post-tensioned to sustain the concentrated prestressing the anchorages.

forcement shall be designed to resist and spalling forces and shall be de- accordance with the requirements of below.

ing stress under the anchorage plate limited to the values given in Article

ment for bursting forces[29,53]

bursting tensile forces.

lesign bursting tensile force P_{bt} in a gular prism subjected to a single force, e two principal directions, a and b, be calculated from the following for-

$$P_{bt} = 0.33(1 - r)P_{ut}$$

r is the relevant value of:

on $2b_1/2b$, Fig. 6.18.

rce P_{ut} shall be taken as:

bonded members, the maximum jack- force P_j or,

- for unbonded members, the maximum jacking force P_j or the tendon force at ultimate strength (i.e. $f_{su} A_t$ where f_{su} is calculated in accordance with Article 6.6.4.3), whichever is the greater.

For circular anchorages or anchor plates $2a_1 = 2b_1 = 0.89$ of the diameter.

Where multiple anchorages with individual anchor plates occur, the end block shall be considered as subdivided into a series of symmetrically loaded prisms in accordance with Fig 6.18 (b), and each prism designed individually.

The reinforcement of adjacent prisms shall be interconnected and the complete multi anchorage system tied together.

When calculating the bursting tensile forces, account shall be taken of the temporary conditions occurring during stressing and the prism size shall be proportioned in accordance with the proposed stressing sequence, and suitable reinforcement shall be designed.

Zones of secondary bursting as described in Article 6.6.9.1 (a) can occur if the anchorages are closely arranged in groups. The bursting forces can be calculated using the above expression for P_{bt}, in which the appropriate group force and r ratio values are inserted in the formula above.

(ii) Amount of reinforcement

The design bursting tensile force P_{bt} in each of the two principal directions a and b, shall be entirely resisted by reinforcement, A_{ra} and A_{rb}.*

Where this bursting steel is not near the concrete surface and there is surface reinforcement other than the bursting steel, the design stress in the bursting steel shall be limited to $0.85 f_{sy}$, but not greater than 200 MPa.

Where the bursting steel forms the surface layer of reinforcement on any face other than the anchorage face, the design stress for this surface reinforcement shall be limited to $2000/d$ but not greater than 125 MPa

* Allowance may be made for the tensile strength of the concrete in the design of reinforcement for bearing surfaces other than prestressing anchorages.

to control cracking. Reinforcement shall be adequately anchored to develop this stress. In the above formula d is the diameter of the reinforcing bar in mm.

(iii) Position of reinforcement in prism

The reinforcement A_{rt} (A_{rb}) required to resist the bursting tensile forces, shall be

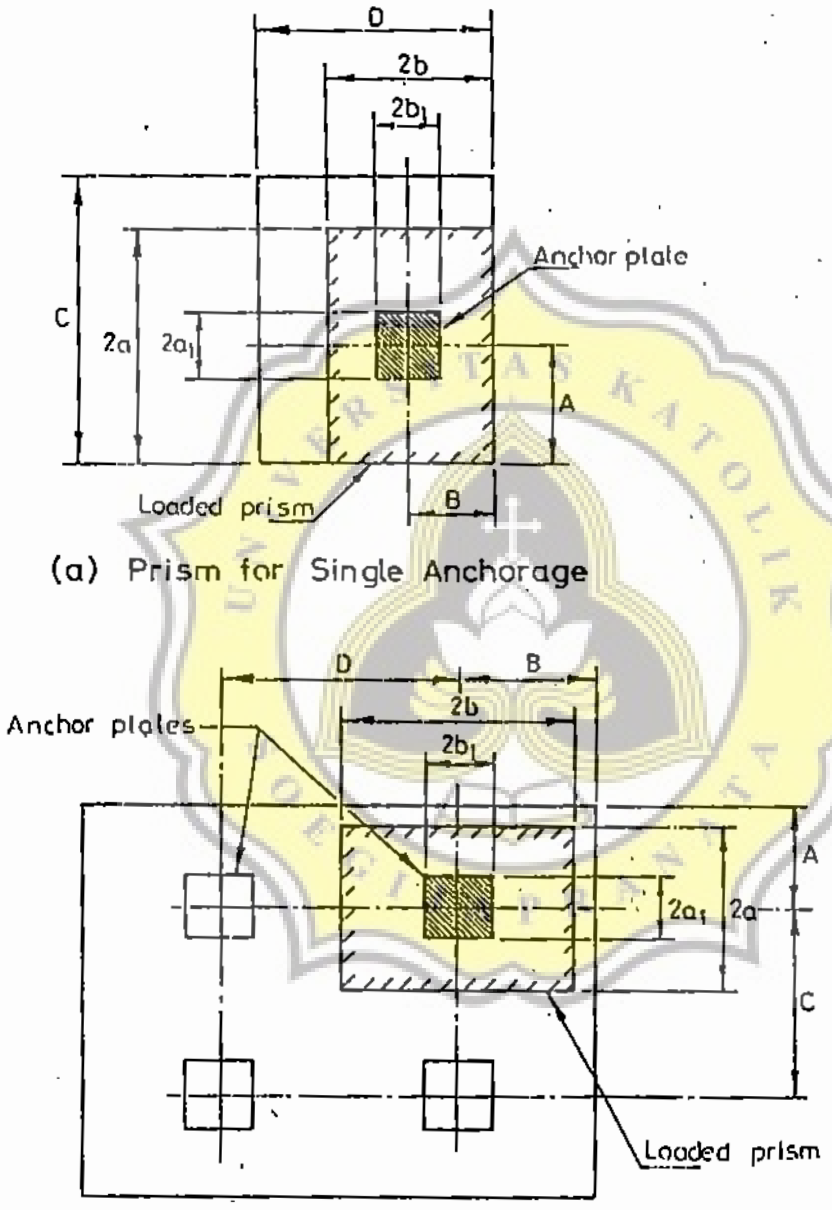

Note : 2a = lesser dimension of 2A or C
2b = lesser dimension of 2B or D

FIGURE 6.18 DESIGN OF POST-TENSIONED END BLOCKS

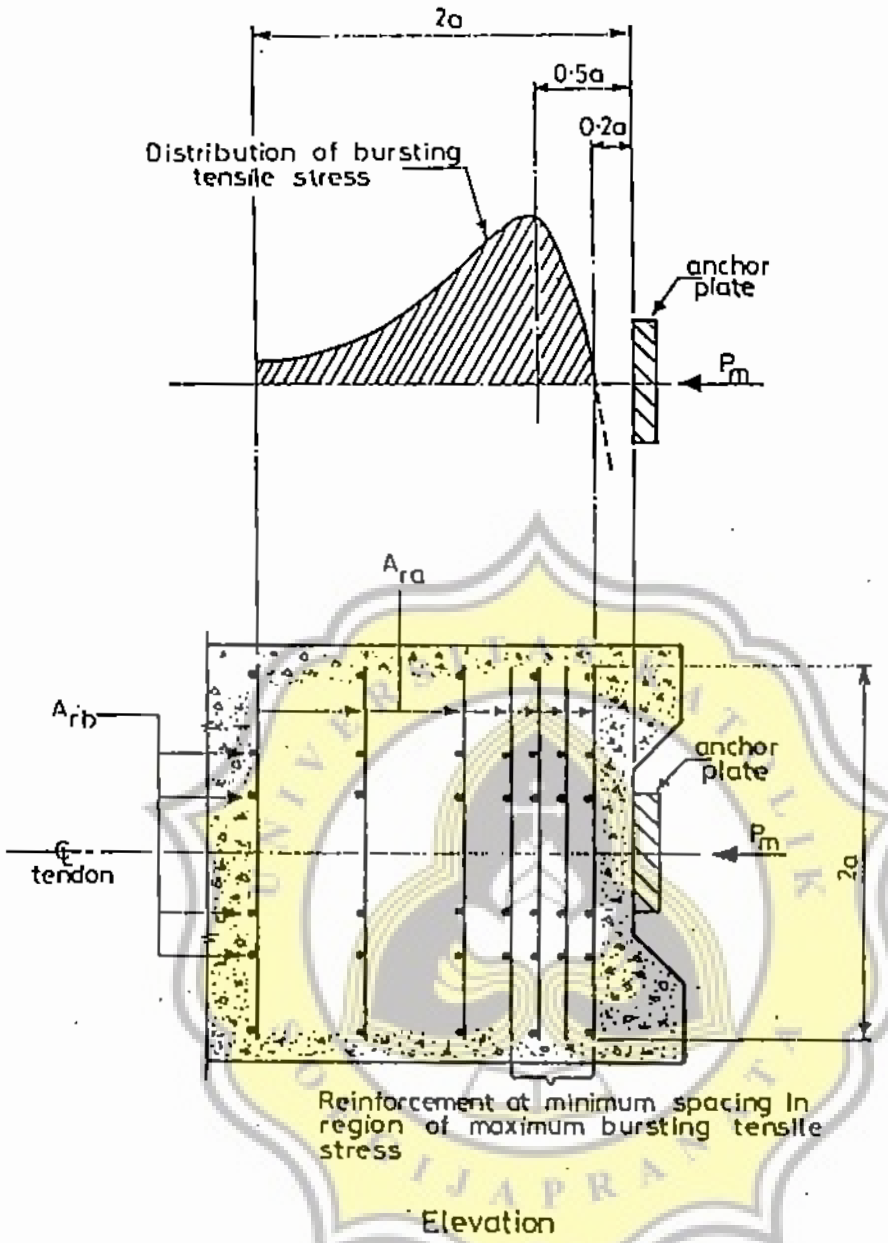

FIGURE 6.19 POSITIONING OF REINFORCEMENT IN POST-TENSIONED END BLOCKS

d in a region extending from 0.2*a* to 0.2*b* to 2*b*) measured from the inside of the anchor plate as shown in Fig. The maximum bursting tensile stresses at a distance approximately 0,5*a* 5) from the inside face of the anchor and the bursting reinforcement be more closely spaced in this re-

forcement in anchorage zones can often ifficult to accommodate and it is impor- sometimes to modify the position requirement specified above to place and adequately compact concrete in the anchorage zone.

(iv) Arrangement of reinforcement

The bursting reinforcement may consist of any, or a combination, of the following types of reinforcement placed perpendicular to the axis of the tendon and adequately anchored:

- Mats consisting of sets of parallel bars in

two perpendicular directions either welded together or bent in a continuous hair-pin form.

- Welded mesh.
- Sets of closed ties.
- Helices.*

Whichever type of reinforcement is used, the aim should be to cross the planes of potential cracking with as many bars as reasonably possible, particularly near the axis of the tendon.

c) Reinforcement for spalling forces

(i) Design spalling tensile forces between anchorages

Spalling forces occurring between anchorages shall be determined using a recognised method of analysis.[29,53] One suitable method is to treat the anchor block as a beam which is loaded on one side by the anchorage forces and on the opposite side by the forces due to a linear stress distribution. The spalling force is then calculated as the maximum beam moment divided by half the depth of the member.

(ii) Amount of reinforcement

The design spalling tensile stresses shall be entirely resisted by reinforcement. The design stress for this reinforcement shall be limited to $2000/d$ but not greater than 125 MPa to control cracking. Reinforcement shall be adequately anchored to develop this stress. In the above formula d is the diameter of the reinforcing bar in mm.

(iii) Position of reinforcement

The end face of the anchorage zone shall be continuously reinforced to prevent edge spalling. Reinforcement shall be placed as close to the end face as possible, and in any case between the end face and a plane at 0.25 × the depth of the member from the end face.

(d) Special reinforcement details in anchorage zones.[29] In addition to the reinforcement required to resist bursting and spalling tensile forces, consideration shall also be given to the reinforcement required in other local zones of tensile stresses that may exist in the region of anchorages.

(i) Unstressed corners

Corners which remain unstressed after stressing due to the gradual dispersion of the concentrated prestressing force from the anchor plate shall be adequately anchored to the prestressed member. These unstressed corners include those regions beyond the anchor plates around anchorage recesses, and the outer corners of cantilever slabs at the ends of post-tensioned members. Nominal longitudinal or diagonal reinforcement detailed to cross the planes of potential cracking shall be provided to secure these corners to the member.

(ii) Internal anchorages

Where internal anchorages (either dead end or stressing end) are cast into a member at intermediate locations (Fig. 6.20), tensile zones develop behind the anchorage with tensile stresses parallel to the tendons. These stresses depend on:

- the magnitude of the anchored prestress force,
- the magnitude of the compressive stress in the longitudinal direction, and
- the ratio of the area of the anchorage to the total cross-sectional area of the prestressed member.

As a general rule, special reinforcement designed to resist from 20 to 50 per cent of the prestress force in the tendon, depending on the influence of the three factors above, should be provided in accordance with Fig. 6.20. Such reinforcement shall extend at least over a length of $2d_m$ as shown in Fig. 6.20 and have sufficient length to develop the yield stress f_{sy} of the reinforcing bar, as specified in Article 6.2.6, at the anchorage.

---

*The helices often provided with patent anchorages shall not be considered to form part of the end block reinforcement for calculation purposes. However, assuming they can be installed without detriment to the placing and compaction of concrete, helices should be provided.

nal anchorages

e external anchorages (i.e. anchorages d on a protruding bracket on the mem- ne used, reinforcement in addition to provided to resist the bursting tensile shall be designed, where applicable to:

sist tension caused by curvature of ten- ns.

ovide shear connection to the main ember and cater for the distribution of e prestress force into the main member.

sist the forces as described in (ii) above, d

sist tension caused by local eccentricity prestress force.

6.6.10 Design of Stepped Joints[54]

6.6.10.1 Post-tensioned Members

(a) General. The following provisions apply to the type of joint shown in Fig. 6.21 for a post-tensioned member.

When determining the values of U_R and U_H, the ultimate vertical and horizontal reactions, consideration shall be given to the method of erection and the forces developed during the various stages of construction.

(b) Design for Applied Loads. The stresses in a stepped joint due to applied loads shall not exceed the values in Article 6.4.1.

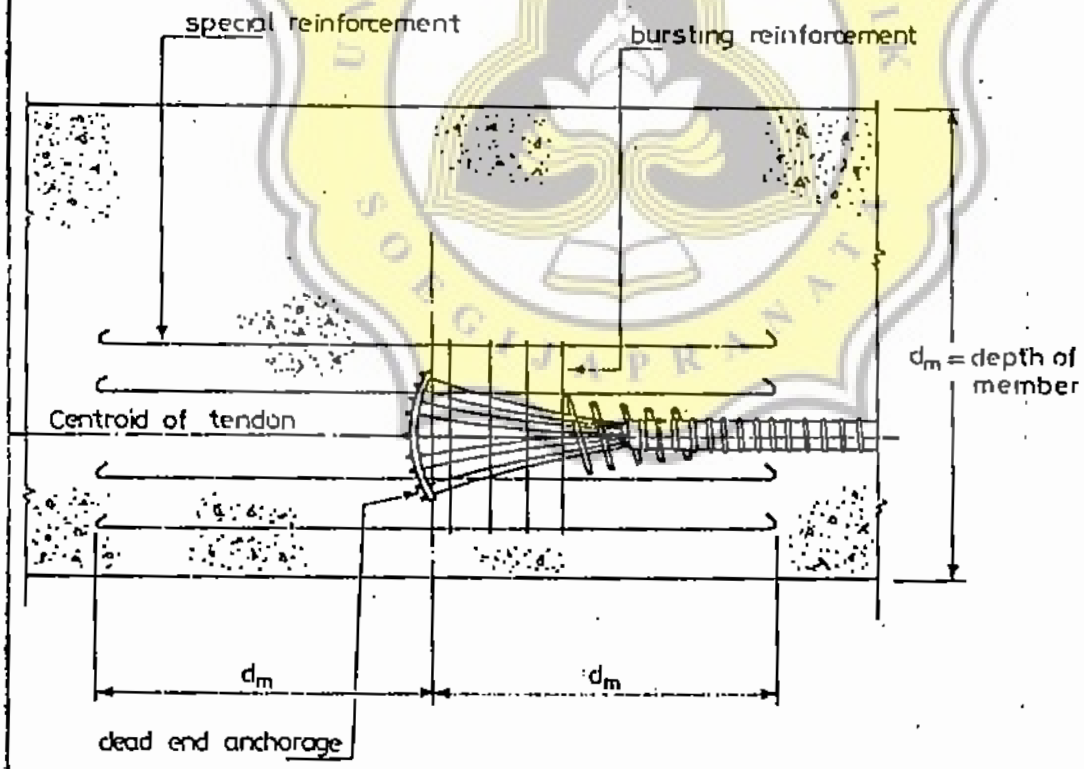

URE 6.20 TYPICAL REINFORCEMENT DETAILS AT INTERNAL DEAD END ANCHORAGE

ONEN SISTEM VSL

ER-HIDUP VSL TIPE Sc.

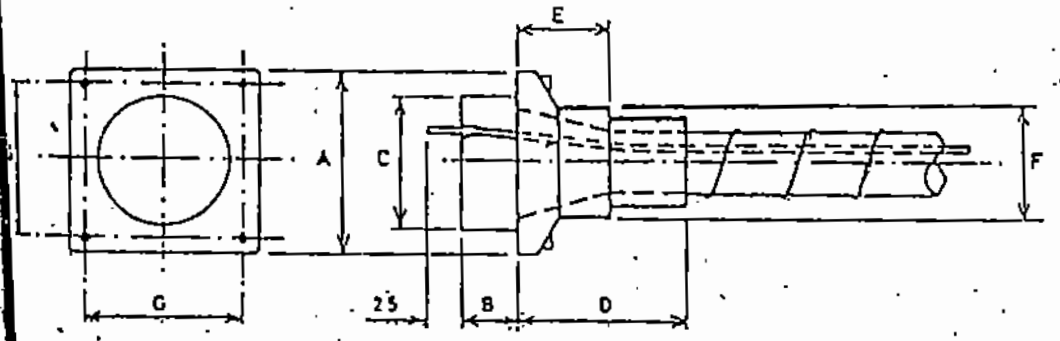

Tipe	Ukuran (mm)							Beban karakteristik (ton)
	A	B	C	D	E	F	G	
7Sc	165	60	110	100	60	85	125	131,2
12Sc	215	60	150	160	90	117	150	225,0
19Sc	265	75	180	210	110	141	200	356,2
31Sc	315	105	230	300	160	175	250	581,2

TABEL II-1, ANGKER-HIDUP VSL TIPE Sc

dup VSL tipe Sc sangat populer, duknya yang sederhana serta terbaja-cor. Sejak 1973, angker tipe menggantikan sejumlah besar pengker-hidup VSL tipe S. Tulangan angker ini harus direncanakan una mengatasi gaya "bursting".

ATI VSL TIPE P

VSL tipe .P dipakai bila lai yang tersedia sangat terbatas emakaian angker-mati tipe U dilaksanakan. Plat dukung angkan oleh sistem jepit-lingkar pada ujung kawat untaian. Baunaian yang tidak terbungkus ng bisa bekerja secara lekatan u tanpa lekatan (unbonded). kan gaya-prategangan segera alat-dukung, maka bagian kaersebut dilaksanakan tanpa le- blok-ujung angker ini harus tersendiri.

dukung standard di atas bersangkar. Bila diperlukan bensegi panjang hubungilah Dencanaan VSL.

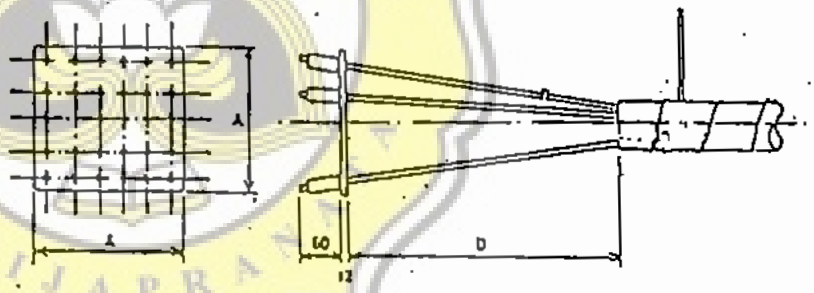

Tipe	Ukuran (mm)		Beban karakteristik (ton)
	A	D	
1P	60	60	18,7
3P	100	100	56,2
7P	150	225	131,2
12P	200	350	225,0
19P	250	475	356,2
31P	350	700	581,2

TABEL II-2, ANGKER-MATI VSL TIPE P

RAK "VSL MULTISTRAND SYSTEM"

idrolik dua-arah VSL digerakkan oleh pompa-hidrolik listrik yang menghasilkan tekanan n68 MPA. Dongkrak beserta alat ukur-tekanan ditera di Balai Penelitian Bahan-Bahan, Depar-industrian, Bandung.

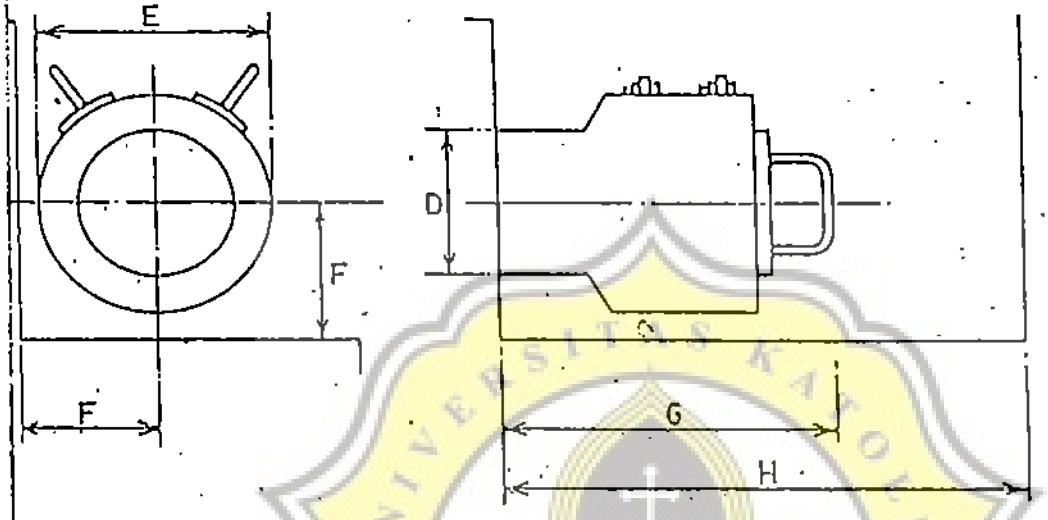

TABEL II-8, DONGKRAK VSL

D (mm)	E (mm)	F (mm)	G (mm)	H (mm)	Langkah Kerja Torak (mm)	Berat (kg)	Kapasitas Nominal (ton)
—	280	200	800	1300	160	140	105
230	350	200	670	1300	100	130	180
270	390	250	850	1500	100	280	285
300	490	300	700	1500	100	425	460

HIDUP VSL TIPE S

laan normal pemakaian angker-hidup VSL tipe S telah diganti oleh tipe Sc. Karena angker tipe secara rakitan, angker-hidup tipe S lebih mudah disesuaikan dengan tempat yang tersedia. blok-ujung angker ini harus direncanakan tersendiri.

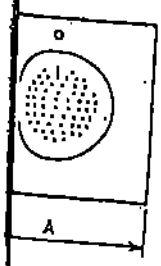

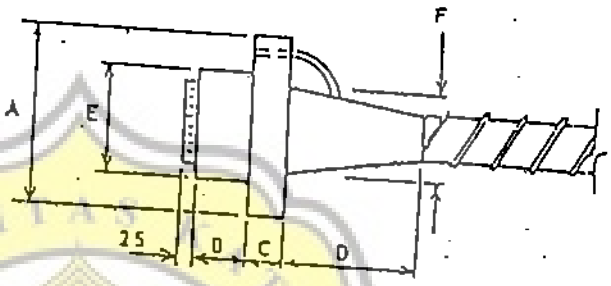

Tipe	Ukuran (mm)						Beban karakteristik (ton)
	A	B	C	D	E	F	
1S	75	45	12	150	45	—	18,7
3S	125	60	16	175	90	50	56,2
7S	200	60	20	225	110	74	131,2
12S	250	60	32	250	150	104	225,0
19S	325	75	50	275	180	135	356,2
31S	400	105	64	350	230	174	581,2

TABEL II-7, ANGKER-HIDUP VSL TIPE S

OPLING TIPE C

ling menghubungkan suatu tendon yang telah ditarik dengan tendon baru yang disambung pala angker khusus. Tendon baru ditahan oleh sistem jepit-lingkar pada ujung-ujung kawat- ng dipasang sebelumnya di lapangan.

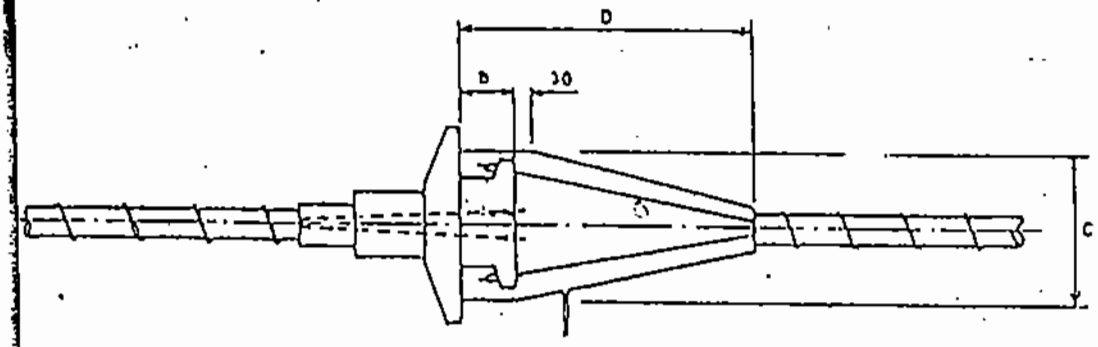

ANGKER-KOPLING VSL TIPE C

Tipe	Ukuran (mm)			Beban karakteristik (ton)
	B	C	D	
3C	110	160	165	56,2
7C	110	185	200	131,2
12C	110	225	330	225,0
19C	110	225	565	356,2
31C	140	350	1010	581,2

TABEL II-5. ANGKER-KOPLING VSL TIPE C

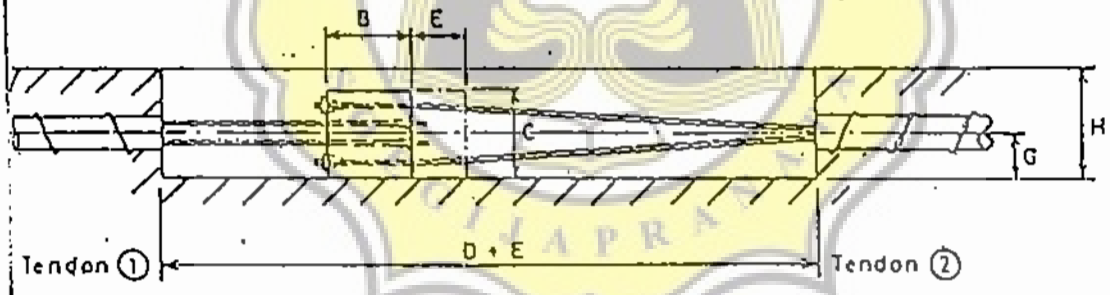

naan tidak memungkinkan ka- ujung-ujung, dapat diguna- dup tengah VSL tipe Z. Salah iannya adalah seperti pada owongan yang tidak dapat di- jian luar dan tidak diizinkan bagian dalam. Ukuran-ukuran iberikan dapat digunakan se- t, ukuran lain dapat ditentu- ngan keperluan.

Tipe	2 Z	4 Z	6 Z	12 Z
A	130	160	200	200
B	60	70	90	140
C	80	90	130	140
D[1]	560	720	890	1440
E	Perpanjangan tendon 2			
F	170	200	240	320
G	60	65	85	90
H[1]	140	150	190	200

1) Ukuran-ukuran untuk permukaan beton yang melengkung diberikan atas permintaan.

II VSL TIPE H

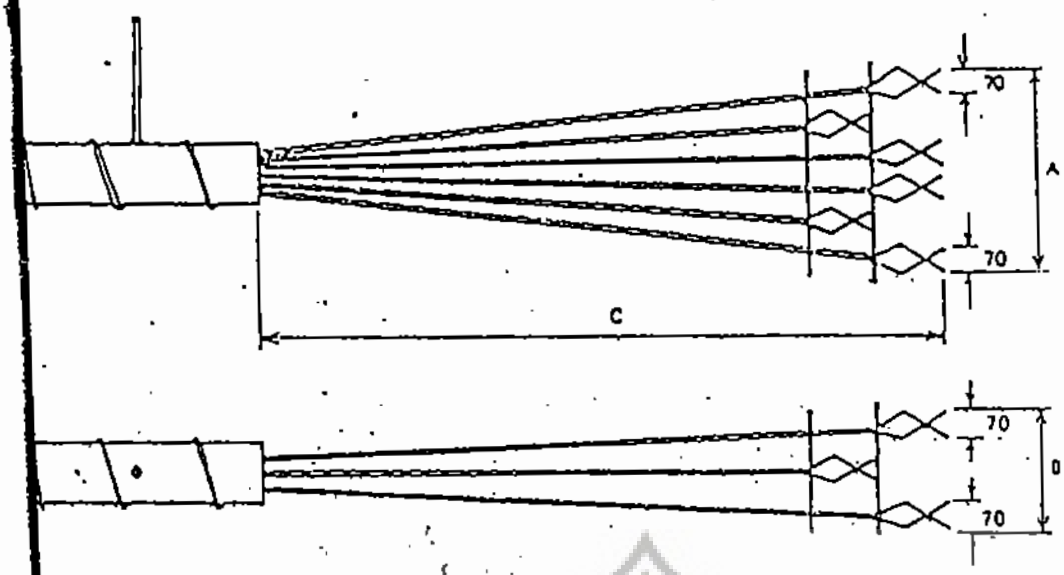

VSL tipe H bekerja tanpa plat-ng masing-masing kawat-untai-ngkan dengan alat khusus, se-entuk gelembung. Gaya pra-sebagian ditahan oleh gelem-bagian oleh lekatan antara ka-dan betonnya. Angker mati tipe pakai pada konstruksi jembatan Pada penggunaan angker ini utu beton minimum K 300 pa-bari.

Tipe	Ukuran (mm)			Beban karakteristik (ton)
	A	B	C	
1H	70	70	930	18,7
3H	230	70	930	56,2
7H	190	170	1280	131,2
12H	310	270	1280	225,0
19H	390	310	1280	356,2
31H	470	430	1280	581,2

TABEL II-3, ANGKER-MATI VSL TIPE H

II VSL TIPE U

VSL tipe U meneruskan gaya n pada plat-dukung gelung kawat-untaian dengan beton. umnya dipakai untuk panjang dari 30 m, mengingat tempat sedia untuk melengkungkan Tulangan blok-ujung harus lersendiri.

Tipe	Ukuran (mm)			Beban karakteristik (ton)
	A	B	D	
1U	225	16	600	18,7
3U	225	75	600	56,2
7U	225	175	600	131,2
12U	225	275	700	225,0
19U	225	400	800	356,2
31U	225	640	1300	581,2

TABEL II-4, ANGKER-MATI VSL TIPE U

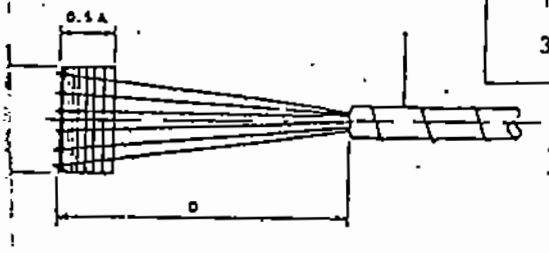

SIFAT TENDON VSL

	Luas Tampang Nominal (mm²)	Berat (kg/1000 m)	Beban Putus Min. (Ton)	Beban Batas Rogang 0,2 % (Ton)	Perpanjangan Min. Sampai Putus Pada 60 cm	Relaxasi Setelah 1000 Jam Pada 0,7 Beban Putus	Modulus-Elastik (kg/cm²)
	98,7	775	18,75	15,9	3,5 %	2,5 %	1,83 — 1,98 × 10⁶

TABEL II-9, SIFAT-SIFAT TENDON VSL

Jumlah Kawat Untaian	Luas Tampang (mm²)	Berat (kg/1000 m)	Diameter Selubung (mm)		Gaya Prapenegangan Terhadap Beban-Putus Dalam Ton				Tipe Dongkrak
			Ideal	Min.	60 %	70 %	80 %	100 %	
1	98,7	775	36	36	11,2	13,1	15	18,7	TUNGGAL
2	197	1550	36	36	22,5	26,2	30	37,5	VSL 3
3	296	2325	36	36	33,7	39,4	45	56,2	
4	395	3100	39	39	45,0	52,5	60	75,0	VSL 7
5	495	3875	39	39	56,2	65,6	75	93,7	
6	592	4650	45	45	67,5	78,7	90	112,5	
7	691	5425	51	45	78,7	91,9	105	131,2	
8	790	6200	51	51	90,0	105,0	120	150,0	VSL 12
9	888	6980	57	54	101,2	118,1	135	168,7	
10	987	7750	60	54	112,5	131,2	150	187,5	
11	1086	8530	60	60	123,7	144,4	165	206,2	
12	1184	9300	69	60	135,0	157,5	180	225,0	
13	1283	10100	69	63	146,2	170,6	195	243,7	VSL 19
14	1382	10900	69	63	157,5	183,7	210	262,5	
15	1481	11600	78	69	168,7	196,9	225	281,2	
16	1579	12400	78	69	180,0	210,0	240	300,0	
17	1678	13200	78	78	191,2	223,1	255	318,7	
18	1777	14000	78	78	202,5	236,2	270	337,5	
19	1875	14700	84	78	213,7	249,4	285	356,2	
20	1974	15500	84	81	225,0	262,5	300	375,0	VSL 31
21	2073	16300	84	81	236,2	275,6	315	393,7	
22	2171	17100	90	81	247,5	288,7	330	412,5	
23	2270	17800	90	81	258,7	301,9	345	431,2	
24	2369	18600	90	87	270,0	315,0	360	450,0	
25	2468	19400	93	90	281,2	328,1	375	468,7	
26	2566	20200	93	90	292,5	341,2	390	487,5	
27	2665	20900	96	90	303,7	354,4	405	506,2	
28	2764	21700	96	90	315,0	367,5	420,0	525,0	
29	2862	22400	102	95	326,2	380,6	435,0	543,7	
30	2961	23200	102	95	337,5	393,7	450,0	562,5	
31	3060	24000	102	95	348,7	406,9	465,0	581,2	

Keterangan untuk tendon tipe 37, 42 dan 55 dapat diperoleh di bagian perencanaan VSL. Tendon digunakan untaian tujuh-kawat (seven wire strand), mutu super.

Republic of Indonesia
Ministry of Public Works
Directorate General of Water Resources Development

DOLOK PENGGARON DRAINAGE DESIGN PROJECT

PROJECT DESIGN REPORT

Volume 1

January 1992

DHV

DHV CONSULTANTS

P.T. SEECONS

P.T. BUANA ARCHICON

PETA LOKASI

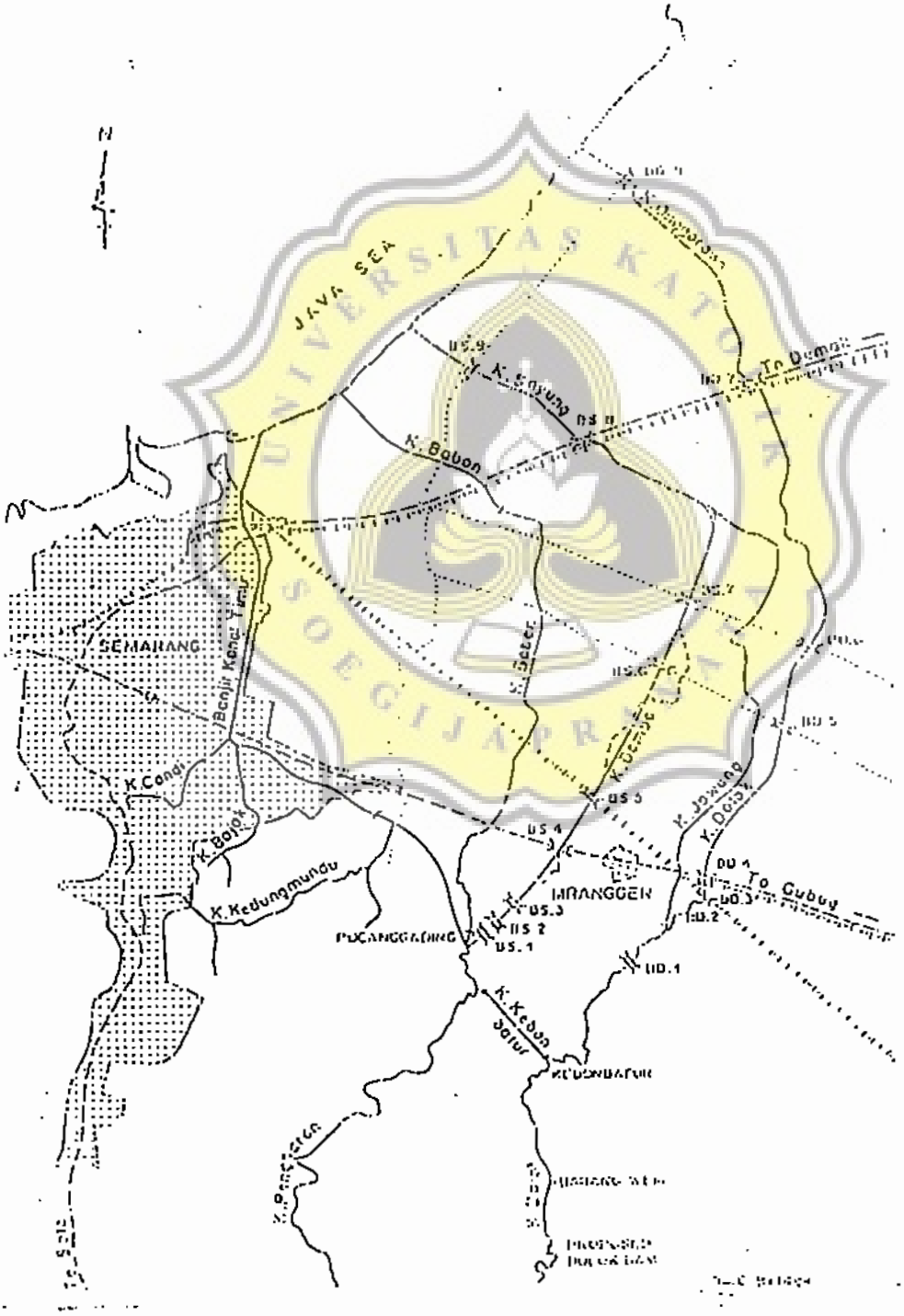
JAVA SEA
K. Gayung
K. Babon
To Demak
SEMARANG
K. Condi
K. Bojok
K. Kedungmundu
PUCANGGADING
MRANGGEN
K. Jragung
K. Dolog
To Cubuy
K. Kedon
Jatur
KEDONDATUR